MEDFIELD GREEN SITE CIVIL/FOUNDATION PERMIT

NORTH MEADOWS RD. MEDFIELD, MA

OWNER / DEVELOPER
MEDFIELD MEADOWS, LLC
Dover, MA

DEVELOPMENT CONSULTANTS
SEB, LLC
Needham, MA

CIVIL ENGINEER
RONALD TIBERI, P.E.
Natick, MA

SURVEYOR
CHENEY ENGINEERING Co., INC.
Needham, MA

ARCHITECT
WINSLOW ARCHITECTS, INC.
Arlington, MA

MEP ENGINEER
WOZNY/BARBAR & ASSOCIATES, INC.
Hanover, MA

STRUCTURAL ENGINEER
DM BERG CONSULTANTS, P.C.
Needham, MA

LANDSCAPE ARCHITECT
BOHLER ENGINEERING
Southborough, MA

TRAFFIC ENGINEER
VANASSEE & ASSOCIATES, INC.
Andover, MA





LOCUS MAP

DEVELOPMENT SUMMARY

LAND AREA: 2.92 acres

TOTAL BUILDING FLOOR AREA: 58,100sf
24 Rental Units: 24,600 sf
12 Townhomes: 33,500 sf

FLOOR AREA RATIO (FAR): .46

NO./TYPES OF UNITS 36 UNITS
RENTAL 24 UNITS
5 – 1BR 750sf
16 – 2BR 950sf
3 – 3BR 1,350sf

SALES 12 UNITS
5 – 'A' UNITS 4BR, 2,465sf + 900sf on lower level = 3,365sf (not incl. garage) one car garage and Master Bedroom on first floor

6 – 'B' UNITS 3BR, 2,218sf + 610sf on lower level = 2,828sf (not incl. garage) one car garage and bedroom in attic/3rd floor

1 – 'C' UNIT 4 BR, 2,074s + 610sf on lower level = 2,684sf (not incl. garage) one car garage and Master Bedroom on first floor

PARKING SPACES 70 PARKING SPACES
RENTAL 41 Spaces
SALES 12 garage
12 driveway
05 guest

ZONING REVIEW

Chapter 300 ZONING BY-LAW

- *Section 300-5.3* Use Table Item 1.4 Multi-family Use Prohibited in RS Zone
- *Section 300-5.3* Use Table Item 1.3 & 1.4 - Special Permit and Site plan review (not required for a comprehensive permit)
- *Section 300 Attachment 2 & 3*- Table of Conventional Dimensional Requirements, as shown below:

Zoning District: **Residential**

	Required RS	Proposed (Total)	Waiver
Minimum Lot Size	20,000 sf	127,360 sf	None required
Minimum Frontage	96'	>200'	None required
Front Setback	30'	15'	Required
Side Setback	12'	15'	None required
Rear Setback	40'	25	Required
Highest Bldg Height Article 6	35' or 2.5 stories whichever is less	40' Mean Height	Required
Perfect Square	96x96	200x200	None required
Floor Area Ratio	0.35	0.46	Required
Lot Coverage	20%	52%	Required
Subsurface Infiltration System Minimum Lot Size	N/A	Injection Well	Required

- *Section 300-6.2 F.*
Building within the following districts will be subject to the respective Zoning Bylaw Section as a special permit: Open Space Residential, Article 7; Floodplain District, Article 10; Watershed Protection District, Article 11; and Aquifer Protection District, Article 16.
- *Section 300 - 6.2.G*
Waiver requested to allow projection of steps over 4' in height into required yard setback.
- Section 300-6.2.J
If this section applies to the site, waiver requested from landscape and planting requirements set forth in this section
- *Section 300 – Article 8 - Parking*

	Required RS	Proposed (Total)	Waiver
Parking Ratio 300-8.1	2 spaces/unit	1.94 spaces/unit	Required
Parking within setbacks 300-8.2.F	No accessory parking to be located in front or side setbacks	Parking within the existing underlying zone front setback.	Required
Driveway Min. Width 300-8.3.B.6	24'	20'	Required

- *Section 300-12.1 Earth Removal Permit required.*
The removal of earth from all zoning districts of the Town of Medfield shall be permitted only after special permission of the Board of Selectmen and under these rules and regulations. The Board of Selectmen shall grant no such permit except in conjunction with the construction of subdivision streets approved by the Planning Board; public works or other municipal projects approved by a public authority; or private land development where the Selectmen find that no reasonable alternative contour plan is practicable, and, in that event, that minimal disruption of the natural contours of the site may be permitted. Furthermore, the Board of Selectmen shall grant no such permit as would, in their opinion, adversely affect the scheme of growth laid down in the Zoning Bylaw or elsewhere, or the economic status of the Town, or tend to impair the beauty of the Town, or of the district most immediately affected, or result in health or other hazards.
- *Section 300-13 district signs*
- *Section 300-14.15.G*
Waiver requested from any provisions in this section that would otherwise prohibit the development as planned.
- *Section 110-12 Sewer Extension*
Town Meeting approval required.
There shall be no extensions of the public sewer system for new residential construction in excess of 500 feet in any fiscal year unless approved by a majority of voters present at an Annual Town Meeting or a Special Town Meeting called for that purpose.

ABBREVIATIONS

Acoustical Ceiling Tile	ACT	Gypsum	GYP	Pressure Treated	PT
Above Finish Floor	AFF	Hollow Metal	HM	Painted	PTD
Aluminum	AL	Height	HT	Plywood	PLWD
Alternate	ALT	Inch	IN	Required	REQ, REQ'D
Architectural	ARCH	Interior	INT	Revision	REV
Acoustic Ceiling Tile	CT	Invert	INV	Right Hand	RH
Board	BD	Joint	JT	Room	RM
Between	BETW	Lavatory	LAV	Rough Opening	RO
Building	BLDG	Light Fixture	LF	South	S
Bottom Of	BO	Light Gauge (cold formed)	LGMF	Section	SECT
Cabinet	CAB	Metal Framing		Square Feet	SF
Control Joint	CJ	Left Hand	LH	Sheet	SHT
Ceiling	CLG	Light	LT	Similar	SIM
Clear	CLR	LManufacturer	MFR	Specified	SPEC'D
Closet	CLR	Masonry Opening	MO	Square	SQ
Closet	CL	Maximum	MAX	Stainless Steel	SST
Concrete	CONC			Stone	ST
Carpet	CPT			Storage	STO
Ceramic Tile	CT	Mechanical	MECH	Steel	STL
Diagonal	DIAG	Minimum	MIN	Toilet Accessory	TA
Door	DR	Miscellaneous	MISC	Telephone	TEL
Door Assembly	DA	Masonry Opening	MO	Tongue & Groove	T&G
Dimension	DIM	Maximum	MAX	Thickness	THK
Down	DN	Mechanical	MECH	Threshold	THR
Dryer	D	Minimum	MIN	Top Of	TO
Detail	DTL	Miscellaneous	MISC	Top Of Steel	TOS
Drawing	DWG	Mounted	MTD	Top of Concrete	TOC
Each	EACH	North	N	Toilet Paper Dispenser	TPD
East	E	Not Applicable	NA	Typical	TYP
Elevation	EL	Not In Contract	NIC	Unless Otherwise Noted	UON
Electric (al)	EL EC	Natural	NL	Varies	VAR
Edge Of Slab	EOS	Number	NO	Vinyl Tile	VCT
Electrical Panel	EP	Nominal	NOM	West	W
		Not To Scale	NTS	Wall Oven	WO
Equipment	EQP	North	N		
Exterior	EXT	Not Applicable	NA		
Existing	EXTG	Not In Contract	NIC		
Floor Drain	FD	Number	NO		
Finished	FIN	Nominal	NOM	P.LAM, LAM	
Floor	FLR	Not To Scale	NTS		
Face Of	FO	On Center	OC		
Frame	FR	Outside Diameter	OD		
Fire Retardant Treated	FRT	Opposite Hand	OPH		
Grab Bar	GB	Opening	OPNG		
General Contractor	GC	Plumbing Equipment	PE		
Glass	GL	Plumbing Fixture	PF		
Fire Extinguisher Cabinet	FEC	Plastic Laminate			
Gypsum Wall Board	GWB				

Date issued:

7/15/19

WINSLOW ARCHITECTS INC

89 MASSACHUSETTS AVE.
ARLINGTON, MA 02474

P: 781 648.6600
F: 781 648.6601

www.winslowarchitects.com

Owner/Developer:

MEDFIELD GREEN LLC.

Project:

MEDFIELD GREEN

Drawing:

TITLE SHEET

Revisions:

No.	Description	Date

Stamp:

ANY REPRODUCTION, POSSESSION OR USE OF THIS DRAWING WITHOUT THE WRITTEN PERMISSION OF WINSLOW ARCHITECTS INC. IS PROHIBITED. VIOLATORS WILL BE PROSECUTED TO THE FULL EXTENT OF THE LAW.

© 2019 WINSLOW ARCHITECTS, INC.

Project number:

16-515

Sheet:

G - 001

7/17/2019 3:18:01 PM

Drawing List

GENERAL
G - 001 TITLE SHEET
G - 002 DRAWING LIST & GENERAL NOTES

LANDSCAPE
L - 1 LANDSCAPE PLAN
L - 2 LANDSCAPE NOTES & DETAIL SHEET
L - 3 LIGHTING PLAN

CIVIL
C - 100 EXISTING CONDITIONS
C - 200 SITE PLAN PROPOSED LAYOUT
C - 300 GRADING & EROSION CONTROL PLAN
C - 400 UTILITY PLAN
C - 500 DRAINAGE PLAN
C - DS - 1 DETAIL SHEET
C - DS - 2 DETAIL SHEET

STRUCTURAL
S - 101 STRUCTURAL NOTES
S - 102 STUCTURAL TESTS AND INSPECTIONS
S - 201 TYPICAL DETAILS
S - 202 TYPICAL DETAILS
S - 203 TYPICAL DETAILS
S - 300 FOUNDATION PLANS NOTES AND SCHEDULES
S - 301 - A BUILDING A FOUNDATION AND LOWER LEVEL FLOOR PLAN
S - 301 - B BUILDING B FOUNDATION AND LOWER LEVEL FLOOR PLAN
S - 301 - CD BUILDING C & D FOUNDATION AND BASEMENT FLOOR PLANS
S - 301 - E BUILDING E FOUNDATION AND LOWER LEVEL FLOOR PLAN
S - 301 - F BUILDING F FOUNDATION AND LOWER LEVEL FLOOR PLAN
S - 301 - G BUILDING G FOUNDATION AND LOWER LEVEL FLOOR PLAN
S - 301 - H BUILDING H FOUNDATION AND LOWER LEVEL FLOOR PLAN
S - 401 - AB BUILDING A & B FIRST FLOOR FRAMING PLAN
S - 401 - CD BUILDINGS C & D FIRST FLOOR FRAMING PLANS
S - 600 UNIT TYPE A & B & B3 FIRST FLOOR FRAMING PLANS
S - 701 FOUNDATION SECTIONS AND DETAILS
S - 702 FOUNDATION SECTIONS AND DETAILS

PLUMBING
P-001 PLUMBING LEGEND, SCHEDULES, & NOTES
P-002 PLUMBING DETAILS
P-003 PLUMBING RISERS
P-AB-100.1 PLUMBING BUILDING A – UNDERGROUND PLAN
P-AB-100.2 PLUMBING BUILDING B – UNDERGROUND PLAN
P-AB-101 PLUMBING BUILDING A & B – BASEMENT FLOOR PLAN
P-C-100 PLUMBING BUILDING C – UNDERGROUND PLAN
P-C-101 PLUMBING BUILDING C – BASEMENT FLOOR PLAN
P-D-100 PLUMBING BUILDING D – UNDERGROUND PLAN
P-D-101 PLUMBING BUILDING D – BASEMENT FLOOR PLAN
P-E-100 PLUMBING BUILDING E – UNDERGROUND PLAN
P-E-101 PLUMBING BUILDING E – BASEMENT FLOOR PLAN
P-F-100 PLUMBING BUILDING F – UNDERGROUND PLAN
P-F-101 PLUMBING BUILDING F – BASEMENT FLOOR PLAN
P-G-100 PLUMBING BUILDING G – UNDERGROUND PLAN
P-G-101 PLUMBING BUILDING G – BASEMENT FLOOR PLAN
P-H-100 PLUMBING BUILDING H – UNDERGROUND PLAN
P-H-101 PLUMBING BUILDING H – BASEMENT FLOOR PLAN
P-AB-201 PLUMBING GAS BUILDING A & B – BASEMENT FLOOR PLAN
P-C-201 PLUMBING GAS BUILDING A & B – BASEMENT FLOOR PLAN
P-D-201 PLUMBING GAS BUILDING A & B – BASEMENT FLOOR PLAN
P-E-201 PLUMBING GAS BUILDING A & B – BASEMENT FLOOR PLAN
P-F-201 PLUMBING GAS BUILDING A & B – BASEMENT FLOOR PLAN
P-H-201 PLUMBING GAS BUILDING A & B – BASEMENT FLOOR PLAN

MECHANICAL:
M-001 MECHANICAL LEGEND & GENERAL NOTES
M-002 MECHANICAL SCHEDULES
M-003 MECHANICAL SCHEDULES
M-AB-100 MECHANICAL BUILDING A&B BASEMENT FLOOR PLAN
M-C-100 MECHANICAL BUILDING C BASEMENT FLOOR PLAN
M-D-100 MECHANICAL BUILDING D BASEMENT FLOOR PLAN
M-E-100 MECHANICAL BUILDING E BASEMENT FLOOR PLAN
M-F-100 MECHANICAL BUILDING F BASEMENT FLOOR PLAN
M-G-100 MECHANICAL BUILDING G BASEMENT FLOOR PLAN
M-H-100 MECHANICAL BUILDING H BASEMENT FLOOR PLAN
M-201 MECHANICAL DETAILS
M-202 MECHANICAL DETAILS
M-204 MECHANICAL DETAILS

ELECTRICAL:
E-001 ELECTRICAL LEGEND, NOTES, & ABBREVIATIONS
E-002 ELECTRICAL SITE PLAN
E-003 ELECTRICAL SITE LIGHTING PLAN
E-A-100 BUILDING A ELECTRICAL BASEMENT PLAN
E-B-100 BUILDING B ELECTRICAL BASEMENT PLAN
E-C-100 BUILDING C ELECTRICAL BASEMENT & FIRST FLOOR PLAN
E-D-100 BUILDING D ELECTRICAL FIRST FLOOR & BASEMENT PLAN
E-E-100 BUILDING E ELECTRICAL BASEMENT PLAN
E-F-100 BUILDING F ELECTRICAL BASEMENT PLAN
E-G-100 BUILDING G ELECTRICAL BASEMENT PLAN
E-H-100 BUILDING H ELECTRICAL BASEMENT PLAN
E-H-103 BUILDING H ELECTRICAL THIRD FLOOR PLAN
E-201 ELECTRICAL POWER RISER DIAGRAM
E-202 ELECTRICAL FIRE ALARM RISER DIAGRAM
E-301 ELECTRICAL SCHEDULES
E-402 ELECTRICAL DETAILS

TELE-COM:
T-001 LEGEND, ABBREVIATIONS, GENERAL NOTES AND DETAILS
T-002 SITE PLAN
T-A-100 BUILDING A – BASEMENT PLAN, TELE-COM
T-B-100 BUILDING B – BASEMENT PLAN, TELE-COM
T-C-100 BUILDING C – BASEMENT & FIRST FLOOR PLANS
T-D-100 BUILDING D – BASEMENT & FIRST FLOOR PLANS
T-E-100 BUILDING E – BASEMENT PLAN, TELE-COM
T-F-100 BUILDING F – BASEMENT PLAN, TELE-COM
T-G-100 BUILDING G – BASEMENT PLAN, TELE-COM
T-H-100 BUILDING H – BASEMENT PLAN, TELE-COM
T-601 SCHEMATIC DIAGRAMS

FIRE PROTECTION
F-000 FIRE PROTECTION LEGEND & NOTES
F-001 FIRE PROTECTION DETAILS
F-AB-100 FIRE PROTECTION BUILDINGS A+B BASEMENT
F-F-100 FIRE PROTECTION BUILDING F BASEMENT PLAN
F-G-100 FIRE PROTECTION BUILDING G BASEMENT PLAN
F-H-100 FIRE PROTECTION BUILDING H BASEMENT PLAN

GENERAL

1. CONTRACTOR SHALL NOTIFY ARCHITECT IMMEDIATELY IF HIDDEN EXISTING CONDITIONS REQUIRE DESIGN MODIFICATIONS. NO DEVIATIONS FROM THE WORK SHOWN OR REASONABLY IMPLIED SHALL BE UNDERTAKEN WITHOUT THE ARCHITECT'S WRITTEN CONSENT

2. CONTRACTOR SHALL VERIFY ALL DIMENSIONS AND EXISTING CONDITIONS IN THE FIELD AND SHALL NOTIFY ARCHITECT OF ANY DISCREPANCIES PRIOR TO CONSTRUCTION

3. GC TO NOTIFY THE OWNER/OWNER'S REP WITHIN 24 HOURS TO REPORT ANY TYPE OF DAMAGE, INSURABLE OR OTHERWISE. THE GC WILL BE SOLELY RESPONSIBLE FOR ANY CLAIMS FOR DAMAGE TO THE PREMISES DURING THE CONSTRUCTION PERIOD DUE TO VANDALISM, WEATHER DAMAGE OR OTHERWISE IF DAMAGE IS NOT REPORTED WITHIN 24 HOURS

4. CONTRACTOR SHALL CROSS REFERENCE THE PROJECT MANUAL WITH THE DRAWINGS AND SHALL NOTIFY THE ARCHITECT OF ANY DISCREPANCIES PRIOR TO CONSTRUCTION. WINSLOW ARCHITECTS IS SOLELY RESPONSIBLE FOR CHANGES TO THE DRAWINGS &/OR SPECIFICATION.

5. CONTRACTOR SHALL REVIEW PRODUCTS SPECIFIED IN THESE DRAWINGS WITH ARCHITECT AND VERIFY ALL SIZES AND QUANTITIES AND VERIFY ALL DIMENSIONS AT THE BUILDING SITE PRIOR TO ORDERING, PURCHASING INSTALLING WORK.

5. WORK TO COMPLY WITH MANFUACTURER'S RECOMMENDATIONS AND SPECIFICATIONS. ANY DISCREPANCIES BETWEEN MANUFACTURER'S INSTALLATION INSTRUCTIONS AND THE DRAWINGS/PROJECT MANUAL SHALL BE BROUGHT TO THE ARCHITECT'S ATTENTION IMMEDIATELY

6. THE DRAWINGS ARE NOT THE SOLE SOURCE OF INFORMATION FOR THIS PROJECT. CONTRACTOR SHALL BE FAMILIAR WITH ALL DRAWINGS, THE PROJECT MANUAL, DETAILS, AND SCHEDULES. ANY DISCREPANCIES SHALL BE BROUGHT TO THE ARCHITECT'S ATTENTION IMMEDIATELY

7. CONTRACTOR SHALL COORDINATE THE WORK OF ALL SUBCONTRACTORS AND SHALL IDENTIFY AND RESOLVE WITH THEM ANY POTENTIAL CONFLICTS PRIOR TO COMMENCING THE WORK

8. ALL SUBCONTRACTORS AND MATERIAL SUPPLIERS SHALL USE COMPLETE SET OF CONSTRUCTION DOCUMENTS WHEN PREPARING THEIR BIDS, COORDINATING THEIR WORK, AND THROUGH FINAL EXECUTION OF THEIR WORK

9. THE WORK SHALL CONFORM TO ALL APPLICABLE BUILDING CODES AND STANDARDS. IHE WORK IS FOR THE CONSTRIIUCTION OF (8) RESIDENTIAL BUILDINGS. CONTRACTOR IS RESPONSIBLE FOR KNOWING THESE CODES AND SHALL INFORM THE ARCHITECT IMMEDIATELY OF ANY POTENTIAL CODE VIOLATIONS.

10. CONTRACTOR AND ALL SUBCONTRACTORS SHALL SHOW EVIDENCE OF APPROPRIATE LIABILITY AND WORKMAN'S COMPENSATION INSURANCE AT THE OUTSET OF CONSTRUCTION; SHALL MAINTAIN THESE POLICIES FOR THE DURATION OF CONSTRUCTION; AND SHALL SHOW EVIDENCE OF COMPLIANCE WITH APPLICABLE LOCAL AND STATE LICENSING REQUIREMENTS.

11. CONTRACTOR SHALL PROVIDEA SAFE AND SECURE BUILDING SITE FOR THE DURATION OFG THE WORK, PROVIDE LOCKS AS REQUIRED TO SECURE THE SITE, MATERIALS, STAGING AND BUILDING AS NECESSARY.

12. CONTRACTOR SHALL LEAVE THE JOB SITE NEAT AND ORDERLY AT THE END OF EACH WORK DAY

13. ALL CONSTRUCTION SHALL BE PERFORMED IN A WORKMAN-LIKE MANNER WITH ALL WORK PLUMB AND TRUE

14. CONTRACTOR AND SUBS SHALL ZONING AND LOCAL ORDINANCES REGARDING THE WORK SCHEDULE, NOISE AND SAFE AND ORDERLY SITE, BE CONSIDERATE AND RESPECTFUL OF RESIDENTS AT ADJACENT PROPERTIES AND AVOID UNNECESSARY DISTURBANCE

15. THE WORK SHALL INCLUDE APPLYING FOR, PAYING FOR AND OBTAINING ALL APPROVALS, PERMITS, INSPECTION AND CERTIFICATES REQUIRED FOR THE COMPLETION OF THE PROJECT. ANY LOCAL, STATE, UTILITY OR OTHER CREDITS FOR THE PROJECT ARE TO BE CREDITED TO THE OWNER

SYMBOLS



Elevation Designation

Name Elevation — Building Level Designation



Callout Designation


North Arrow



Revision Designation



Section Designation

Room name — Room Name Tag

1 / A101 — Drawing Tag

1 View Name 1/8" = 1'-0" — View Tag

1t — Window Tag

101 — Door Tag

1i — Wall Tag

WINSLOW ARCHITECTS INC

89 MASSACHUSETTS AVE.
ARLINGTON, MA 02474

P: 781 648.6600
F: 781 648.6601

www.winslowarchitects.com

Date issued:

7/15/19

Owner/Developer:

MEDFIELD GREEN LLC.

Project:

MEDFIELD GREEN

Drawing:

DRAWING LIST & GENERAL NOTES

Revisions:

No.	Description	Date

Stamp:

ANY REPRODUCTION, POSSESSION OR USE OF THIS DRAWING WITHOUT THE WRITTEN PERMISSION OF WINSLOW ARCHITECTS INC. IS PROHIBITED. VIOLATORS WILL BE PROSECUTED TO THE FULL EXTENT OF THE LAW.

© 2019 WINSLOW ARCHITECTS, INC.

Project number:

16-515

Sheet:

G - 002

7/17/2019 3:18:01 PM

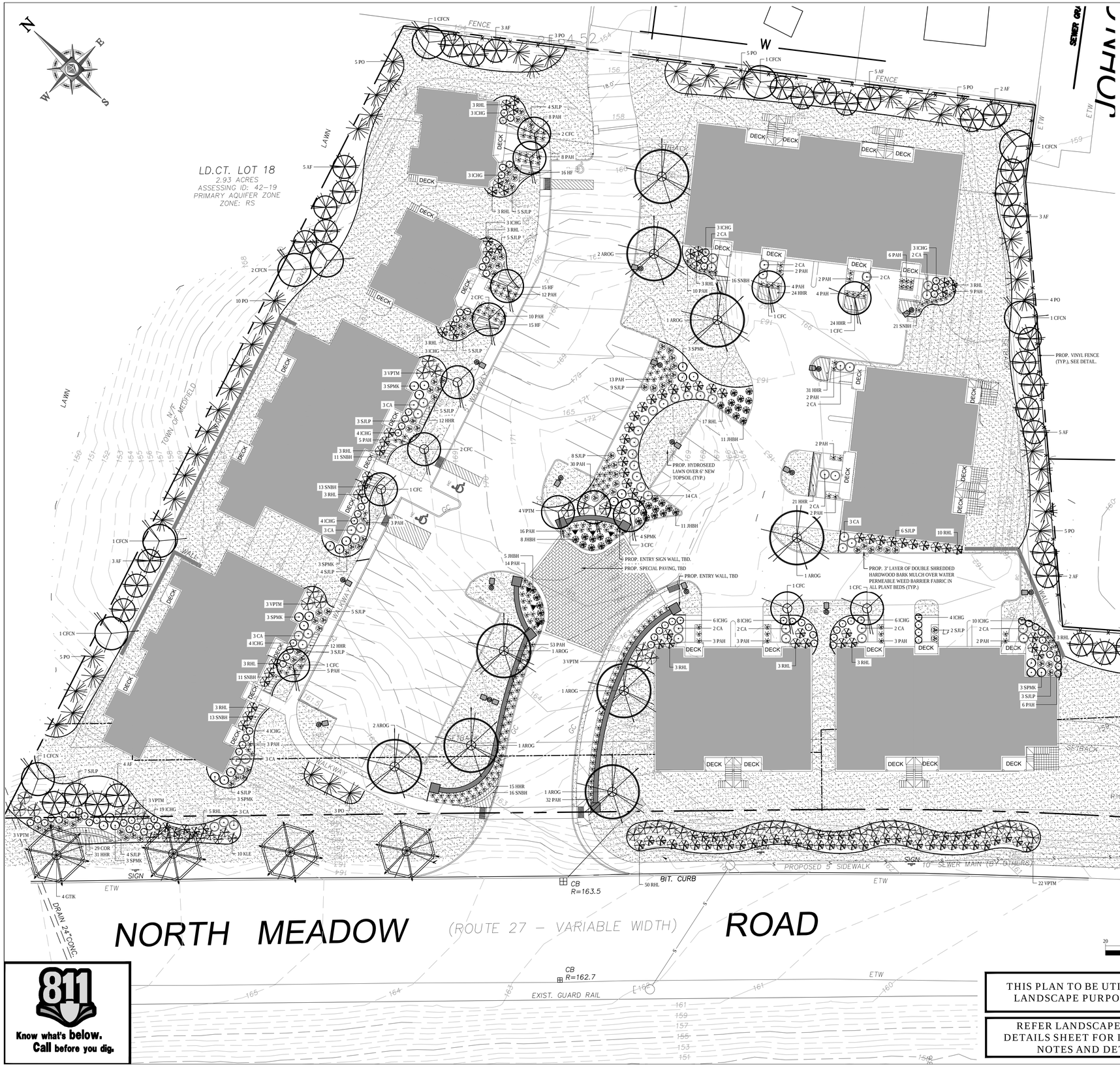

LANDSCAPE SCHEDULE

KEY	QTY.	BOTANICAL NAME	COMMON NAME	SIZE	CONT.
SHADE TREES					
AROG	9	ACER RUBRUM 'OCTOBER GLORY'	OCTOBER GLORY RED MAPLE	2 1/2-3" CAL.	B+B
GTIK	5	GLEDITSIA TRIACANTHOS INERMIS 'SKYCOLE'	SKYLINE THORNLESS HONEYLOCUST	2 1/2-3" CAL.	B+B
SUBTOTAL:	14				
ORNAMENTAL TREES					
CFC	15	CORNUS FLORIDA 'CHEROKEE CHIEF'	RED FLOWERING DOGWOOD	2-2 1/2" CAL.	B+B
CFCN	9	CORNUS FLORIDA 'CLOUD NINE'	WHITE FLOWERING DOGWOOD	2-2 1/2" CAL.	B+B
CRHR	3	CORNUS RUTLAN 'R'	RUTH ELLEN DOGWOOD HYBRID	2-2 1/2" CAL."	B+B
SUBTOTAL:	27				
EVERGREEN TREES					
AF	40	ABIES FRASERI	FRASER FIR	7-8'	B+B
PO	54	PICEA OMORIKA	SERBIAN SPRUCE	6-7'	B+B
SUBTOTAL:	94				
DECIDUOUS SHRUBS					
CA	52	CLETHRA ALNIFOLIA	SUMMERSWEET CLETHRA	24-30"	CONTAINER
SJLP	82	SPIRAEA JAPONICA 'LITTLE PRINCESS'	LITTLE PRINCESS SPIREA	15-18"	CONTAINER
SPMK	25	SYRINGA PATTULA 'MISS KIM'	MISS KIM LILAC	24-30"	B+B
VPTM	41	VIBURNUM PLICATUM TOMENTOSUM 'MARIESII'	MARIESII DOUBLEFILE VIBURNUM	30-36"	B+B
SUBTOTAL:	200				
EVERGREEN SHRUBS					
ICHG	85	ILEX CRENATA 'HOOGENDORN'	HOOGENDORN JAPANESE HOLLY	15-18"	B+B
KLE	10	KALMIA LATIFOLIA 'ELF'	ELF MOUNTAIN LAUREL	12-15"	B+B
RHL	124	RHODODENDRON X 'LANDMARK'	LANDMARK RHODODENDRON	24-30"	B+B
SUBTOTAL:	219				
GROUND COVERS					
JHBH	35	JUNIPERUS HORIZONTALIS 'BAR HARBOR'	BAR HARBOR CREEPING JUNIPER	15-18" SPRD.	CONTAINER
SUBTOTAL:	35				
PERENNIALS					
COR	58	COREOPSIS GRANDIFLORA 'EARLY SUNRISE'	TICKSEED	2 GAL.	CONTAINER
HF	92	HOSTA FORTUNEI 'AUREO MARGINATA'	VARIEGATED HOSTA	2 GAL.	CONTAINER
HHR	340	HEMEROCALLIS 'HAPPY RETURNS'	HAPPY RETURNS DAYLILY	2 GAL.	CONTAINER
SNBH	186	SALVIA NEMEROSA 'BLUE HILL'	BLUE HILL MEADOW SAGE	2 GAL.	CONTAINER
SUBTOTAL:	676				
ORNAMENTAL GRASSES					
PAH	252	PENNISETUM ALOPECUROIDES 'HAMELN'	DWARF FOUNTAIN GRASS	2 GAL.	CONTAINER
SUBTOTAL:	252				

SEED MIX KEY

PROPOSED HYDROSEED

811 Know what's below. Call before you dig.

THIS PLAN TO BE UTILIZED FOR LANDSCAPE PURPOSES ONLY

REFER LANDSCAPE NOTES & DETAILS SHEET FOR LANDSCAPE NOTES AND DETAILS

20 10 5 0 20
1"= 20'

OWNER MAINTENANCE RESPONSIBILITIES

UPON OWNER'S (OR OWNER CONTRACTOR'S) COMPLETION OF LANDSCAPING WORK, THE OWNER IS FULLY RESPONSIBLE FOR ALL FUTURE MAINTENANCE, CARE, UPKEEP, WATERING, AND TRIMMING OF ALL INSTALLED VEGETATION, PLANTS, TREE, BUSHES, SHRUBS, GRASSES, GRASS, ORNAMENTAL PLANTS AND FLOWERS, FLOWERS, GROUND COVER, AND LANDSCAPING, INCLUDING ALL LANDSCAPE ISLANDS AND AREAS ADJACENT OR PART OF THE LANDSCAPED AREAS. THIS RESPONSIBILITY INCLUDES, BUT IS NOT LIMITED TO, THE FOLLOWING:

- TREES ADJACENT TO WALKWAYS AND AREAS OF PEDESTRIAN TRAFFIC MUST BE MAINTAINED TO ASSURE THAT ANY BRANCHES MUST BE LIMBED UP TO A CLEARANCE HEIGHT OF 7 FT. (FROM ALL PEDESTRIAN SURFACES) OR PRUNED BACK TO AVOID ANY INTERFERENCE WITH THE TYPICAL PATH OF TRAVEL.
- TREES WITHIN VEHICULAR SIGHT LINES, AS ILLUSTRATED ON THE LANDSCAPE PLAN, ARE TO BE TRIMMED TO A CLEARANCE HEIGHT OF 7 FT. (FROM ALL PAVED, TRAVELED SURFACES), OR AS OTHERWISE INDICATED ON THE PLANS.
- VEGETATIVE GROUND COVER, SHRUBS AND ORNAMENTAL PLANTS AND GRASSES MUST BE TRIMMED SO THAT NO PORTION OF THE PLANT EXCEEDS 30 INCHES ABOVE GRADE (OF ALL PAVED, TRAVEL SURFACES) ALONG AND WITHIN THE SIGHT LINES OF PARKING LOTS AND INGRESS-EGRESS WAYS.
- FALLEN PLANT FLOWERS, FRUIT, SEEDS AND DEBRIS DROPPINGS ARE TO BE REMOVED IMMEDIATELY FROM VEHICULAR AND PEDESTRIAN TRAFFIC AREAS TO PREVENT TRIPPING, SLIPPING OR ANY OTHER HAZARDS.

THESE REQUIREMENTS DO NOT AFFECT THE PLANT LIFE GUARANTEES THE LANDSCAPE CONTRACTOR IS REQUIRED TO PROVIDE.

Date issued:

01-10-19

WINSLOW ARCHITECTS INC

89 MASSACHUSETTS AVE.
ARLINGTON, MA 02474

P: 781 648.6600
F: 781 648.6601

www.winslowarchitects.com

Owner/Developer:

MEDFIELD MEADOWS LLC

12 Haven Street
Dover, MA 02030

Project:

MEDFIELD GREEN

Meadow Road / Dale Street
Medfield, MA 02052

Drawing:

LANDSCAPE PLAN

Revisions:

No.	Description	Date
1	REV 1	02/06/2019
2	REV 2	03/25/2019

ANY REPRODUCTION, POSSESSION OR USE OF THIS DRAWING WITHOUT THE WRITTEN PERMISSION OF WINSLOW ARCHITECTS INC. IS PROHIBITED. VIOLATORS WILL BE PROSECUTED TO THE FULL EXTENT OF THE LAW.

© 2018 WINSLOW ARCHITECTS, INC.

Stamp:

M.J. MRVA
Matthew J. Mrva
REGISTERED LANDSCAPE ARCHITECT
RHODE ISLAND No. 609
NEW YORK No. 001609
CONNECTICUT No. 1359

Project number:

16-515

Sheet:

L-1

LANDSCAPE SPECIFICATIONS

1. SCOPE OF WORK:

1.1. THE LANDSCAPE CONTRACTOR SHALL BE REQUIRED TO PERFORM ALL CLEARING, FINISHED GRADING, SOIL PREPARATION, PERMANENT SEEDING OR SODDING, PLANTING AND MULCHING INCLUDING ALL LABOR, MATERIALS, TOOLS AND EQUIPMENT NECESSARY FOR THE COMPLETION OF THIS PROJECT, UNLESS OTHERWISE CONTRACTED BY THE GENERAL CONTRACTOR.

2. MATERIALS

2.1. GENERAL - ALL HARDSCAPE MATERIALS SHALL MEET OR EXCEED SPECIFICATIONS AS OUTLINED IN THE STATE DEPARTMENT OF TRANSPORTATION'S SPECIFICATIONS.

2.2. TOPSOIL - NATURAL, FRIABLE, LOAMY SILT SOIL HAVING AN ORGANIC CONTENT NOT LESS THAN 5%, A PH RANGE BETWEEN 4.5-7.0. IT SHALL BE FREE OF DEBRIS, ROCKS LARGER THAN ONE INCH (1"), WOOD, ROOTS, VEGETABLE MATTER AND CLAY CLODS.

2.3. LAWN - ALL DISTURBED AREAS ARE TO BE TREATED WITH A MINIMUM 6" THICK LAYER OF TOPSOIL, OR AS DIRECTED BY THE LOCAL ORDINANCE OR CLIENT, AND SEEDED OR SODDED IN ACCORDANCE WITH THE PERMANENT STABILIZATION METHODS INDICATED ON THE LANDSCAPE PLAN

2.3.1. LAWN SEED MIXTURE SHALL BE FRESH, CLEAN NEW CROP SEED.

2.3.2. SOD SHALL BE STRONGLY ROOTED, WEED AND DISEASE/PEST FREE WITH A UNIFORM THICKNESS. SOD INSTALLED ON SLOPES GREATER THAN 4:1 SHALL BE PEGGED TO HOLD SOD IN PLACE.

2.4. MULCH - ALL PLANTING BEDS SHALL BE MULCHED WITH A 3" THICK LAYER OF DOUBLE SHREDDED HARDWOOD BARK MULCH, UNLESS OTHERWISE STATED ON THE LANDSCAPE PLAN AND/OR LANDSCAPE PLAN NOTES /DETAILS.

2.5. FERTILIZER

2.5.1. FERTILIZER SHALL BE DELIVERED TO THE SITE MIXED AS SPECIFIED IN THE ORIGINAL UNOPENED STANDARD BAGS SHOWING WEIGHT, ANALYSIS AND NAME OF MANUFACTURER. FERTILIZER SHALL BE STORED IN A WEATHERPROOF PLACE SO THAT IT CAN BE KEPT DRY PRIOR TO USE.

2.5.2. FOR THE PURPOSE OF BIDDING, ASSUME THAT FERTILIZER SHALL BE 10% NITROGEN, 6% PHOSPHORUS AND 4% POTASSIUM BY WEIGHT. A FERTILIZER SHOULD NOT BE SELECTED WITHOUT A SOIL TEST PERFORMED BY A CERTIFIED SOIL LABORATORY.

2.6. PLANT MATERIAL

2.6.1. ALL PLANTS SHALL IN ALL CASES CONFORM TO THE REQUIREMENTS OF THE "AMERICAN STANDARD FOR NURSERY STOCK" (ANSI Z60.1), LATEST EDITION, AS PUBLISHED BY THE AMERICAN NURSERY & LANDSCAPE ASSOCIATION (FORMERLY THE AMERICAN ASSOCIATION OF NURSERYMEN).

2.6.2. IN ALL CASES, BOTANICAL NAMES SHALL TAKE PRECEDENCE OVER COMMON NAMES FOR ANY AND ALL PLANT MATERIAL.

2.6.3. PLANTS SHALL BE LEGIBLY TAGGED WITH THE PROPER NAME AND SIZE. TAGS ARE TO REMAIN ON AT LEAST ONE PLANT OF EACH SPECIES FOR VERIFICATION PURPOSES DURING THE FINAL INSPECTION.

2.6.4. TREES WITH ABRASION OF THE BARK, SUN SCALDS, DISFIGURATION OR FRESH CUTS OF LIMBS OVER 1¼", WHICH HAVE NOT BEEN COMPLETELY CALLUSED, SHALL BE REJECTED. PLANTS SHALL NOT BE BOUND WITH WIRE OR ROPE AT ANY TIME SO AS TO DAMAGE THE BARK OR BREAK BRANCHES.

2.6.5. ALL PLANTS SHALL BE TYPICAL OF THEIR SPECIES OR VARIETY AND SHALL HAVE A NORMAL HABIT OF GROWTH: WELL DEVELOPED BRANCHES, DENSELY FOLIATED, VIGOROUS ROOT SYSTEMS AND BE FREE OF DISEASE, INSECTS, PESTS, EGGS OR LARVAE.

2.6.6. CALIPER MEASUREMENTS OF NURSERY GROWN TREES SHALL BE TAKEN AT A POINT ON THE TRUNK SIX INCHES (6") ABOVE THE NATURAL GRADE FOR TREES UP TO AND INCLUDING A FOUR INCH (4") CALIPER SIZE. IF THE CALIPER AT SIX INCHES (6") ABOVE THE GROUND EXCEEDS FOUR INCHES (4") IN CALIPER, THE CALIPER SHOULD BE MEASURED AT A POINT 12" ABOVE THE NATURAL GRADE.

2.6.7. SHRUBS SHALL BE MEASURED TO THE AVERAGE HEIGHT OR SPREAD OF THE SHRUB, AND NOT TO THE LONGEST BRANCH.

2.6.8. TREES AND SHRUBS SHALL BE HANDLED WITH CARE BY THE ROOT BALL.

3. GENERAL WORK PROCEDURES

3.1. CONTRACTOR TO UTILIZE WORKMANLIKE INDUSTRY STANDARDS IN PERFORMING ALL LANDSCAPE CONSTRUCTION. THE SITE IS TO BE LEFT IN A CLEAN STATE AT THE END OF EACH WORKDAY. ALL DEBRIS, MATERIALS AND TOOLS SHALL BE PROPERLY STORED, STOCKPILED OR DISPOSED OF.

3.2. WASTE MATERIALS AND DEBRIS SHALL BE COMPLETELY DISPOSED OF AT THE CONTRACTOR'S EXPENSE. DEBRIS SHALL NOT BE BURIED, INCLUDING ORGANIC MATERIALS, BUT SHALL BE REMOVED COMPLETELY FROM THE SITE.

4. SITE PREPARATIONS

4.1. BEFORE AND DURING PRELIMINARY GRADING AND FINISHED GRADING, ALL WEEDS AND GRASSES SHALL BE DUG OUT BY THE ROOTS AND DISPOSED OF IN ACCORDANCE WITH GENERAL WORK PROCEDURES OUTLINED HEREIN.

4.2. ALL EXISTING TREES TO REMAIN SHALL BE PRUNED TO REMOVE ANY DAMAGED BRANCHES. THE ENTIRE LIMB OF ANY DAMAGED BRANCH SHALL BE CUT OFF AT THE BRANCH COLLAR. CONTRACTOR SHALL ENSURE THAT CUTS ARE SMOOTH AND STRAIGHT. ANY EXPOSED ROOTS SHALL BE CUT BACK WITH CLEAN, SHARP TOOLS AND TOPSOIL SHALL BE PLACED AROUND THE REMAINDER OF THE ROOTS. EXISTING TREES SHALL BE MONITORED ON A REGULAR BASIS FOR ADDITIONAL ROOT OR BRANCH DAMAGE AS A RESULT OF CONSTRUCTION. ROOTS SHALL NOT BE LEFT EXPOSED FOR MORE THAN ONE (1) DAY. CONTRACTOR SHALL WATER EXISTING TREES AS NEEDED TO PREVENT SHOCK OR DECLINE.

4.3. CONTRACTOR SHALL ARRANGE TO HAVE A UTILITY STAKE-OUT TO LOCATE ALL UNDERGROUND UTILITIES PRIOR TO INSTALLATION OF ANY LANDSCAPE MATERIAL. UTILITY COMPANIES SHALL BE CONTACTED THREE (3) DAYS PRIOR TO THE BEGINNING OF WORK.

5. TREE PROTECTION

5.1. CONTRACTOR SHALL BE RESPONSIBLE FOR THE PROTECTION OF ALL EXISTING TREES TO REMAIN. A TREE PROTECTION ZONE SHALL BE ESTABLISHED AT THE DRIP LINE OR AT THE LIMIT OF CONSTRUCTION DISTURBANCE, WHICHEVER IS GREATER. LOCAL STANDARDS THAT MAY REQUIRE A MORE STRICT TREE PROTECTION ZONE SHALL BE HONORED.

5.2. A FORTY-EIGHT INCH (48") HIGH WOODEN SNOW FENCE OR ORANGE COLORED HIGH-DENSITY 'VISI-FENCE', OR APPROVED EQUAL, MOUNTED ON STEEL POSTS SHALL BE PLACED ALONG THE BOUNDARY OF THE TREE PROTECTION ZONE. POSTS SHALL BE LOCATED AT A MAXIMUM OF EIGHT FEET (8') ON CENTER OR AS INDICATED WITHIN THE TREE PROTECTION DETAIL.

5.3. WHEN THE TREE PROTECTION FENCING HAS BEEN INSTALLED, IT SHALL BE INSPECTED BY THE APPROVING AGENCY PRIOR TO DEMOLITION, GRADING, TREE CLEARING OR ANY OTHER CONSTRUCTION. THE FENCING ALONG THE TREE PROTECTION ZONE SHALL BE REGULARLY INSPECTED BY THE LANDSCAPE CONTRACTOR AND MAINTAINED UNTIL ALL CONSTRUCTION ACTIVITY HAS BEEN COMPLETED.

5.4. AT NO TIME SHALL MACHINERY, DEBRIS, FALLEN TREES OR OTHER MATERIALS BE PLACED, STOCKPILED OR LEFT STANDING IN THE TREE PROTECTION ZONE.

6. SOIL MODIFICATIONS

6.1. CONTRACTOR SHALL ATTAIN A SOIL TEST FOR ALL AREAS OF THE SITE PRIOR TO CONDUCTING ANY PLANTING. SOIL TESTS SHALL BE PERFORMED BY A CERTIFIED SOIL LABORATORY.

6.2. LANDSCAPE CONTRACTOR SHALL REPORT ANY SOIL OR DRAINAGE CONDITIONS CONSIDERED DETRIMENTAL TO THE GROWTH OF PLANT MATERIAL. SOIL MODIFICATIONS, AS SPECIFIED HEREIN, MAY NEED TO BE CONDUCTED BY THE LANDSCAPE CONTRACTOR DEPENDING ON SITE CONDITIONS.

6.3. THE FOLLOWING AMENDMENTS AND QUANTITIES ARE APPROXIMATE AND ARE FOR BIDDING PURPOSES ONLY. COMPOSITION OF AMENDMENTS SHOULD BE REVISED DEPENDING ON THE OUTCOME OF A TOPSOIL ANALYSIS PERFORMED BY A CERTIFIED SOIL LABORATORY.

6.3.1. TO INCREASE A SANDY SOIL'S ABILITY TO RETAIN WATER AND NUTRIENTS, THOROUGHLY TILL ORGANIC MATTER INTO THE TOP 6-12". USE COMPOSTED BARK, COMPOSTED LEAF MULCH OR PEAT MOSS. ALL PRODUCTS SHOULD BE COMPOSTED TO A DARK COLOR AND BE FREE OF PIECES WITH IDENTIFIABLE LEAF OR WOOD STRUCTURE. AVOID MATERIAL WITH A PH HIGHER THAN 7.5.

6.3.2. TO INCREASE DRAINAGE, MODIFY HEAVY CLAY OR SILT (MORE THAN 40% CLAY OR SILT) BY ADDING COMPOSTED PINE BARK (UP TO 30% BY VOLUME) AND/OR AGRICULTURAL GYPSUM. COARSE SAND MAY BE USED IF ENOUGH IS ADDED TO BRING THE SAND CONTENT TO MORE THAN 60% OF THE TOTAL MIX. SUBSURFACE DRAINAGE LINES MAY NEED TO BE ADDED TO INCREASE DRAINAGE.

6.3.3. MODIFY EXTREMELY SANDY SOILS (MORE THAN 85%) BY ADDING ORGANIC MATTER AND/OR DRY, SHREDDED CLAY LOAM UP TO 30% OF THE TOTAL MIX.

7. FINISHED GRADING

7.1. UNLESS OTHERWISE CONTRACTED, THE LANDSCAPE CONTRACTOR SHALL BE RESPONSIBLE FOR THE INSTALLATION OF TOPSOIL AND THE ESTABLISHMENT OF FINE-GRADING WITHIN THE DISTURBANCE AREA OF THE SITE.

7.2. LANDSCAPE CONTRACTOR SHALL VERIFY THAT SUBGRADE FOR INSTALLATION OF TOPSOIL HAS BEEN ESTABLISHED. THE SUBGRADE OF THE SITE MUST MEET THE FINISHED GRADE LESS THE REQUIRED TOPSOIL THICKNESS (1"±).

7.3. ALL LAWN AND PLANTING AREAS SHALL BE GRADED TO A SMOOTH, EVEN AND UNIFORM PLANE WITH NO ABRUPT CHANGE OF SURFACE AS DEPICTED WITHIN THIS SET OF CONSTRUCTION PLANS, UNLESS OTHERWISE DIRECTED BY THE PROJECT ENGINEER OR LANDSCAPE ARCHITECT.

7.4. ALL PLANTING AREAS SHALL BE GRADED AND MAINTAINED TO ALLOW FREE FLOW OF SURFACE WATER IN AND AROUND THE PLANTING BEDS. STANDING WATER SHALL NOT BE PERMITTED IN PLANTING BEDS.

8. TOPSOILING

8.1. CONTRACTOR SHALL PROVIDE A 6" THICK MINIMUM LAYER OF TOPSOIL, OR AS DIRECTED BY THE LOCAL ORDINANCE OR CLIENT, IN ALL PLANTING AREAS. TOPSOIL SHOULD BE SPREAD OVER A PREPARED SURFACE IN A UNIFORM LAYER TO ACHIEVE THE DESIRED COMPACTED THICKNESS.

8.2. ON-SITE TOPSOIL MAY BE USED TO SUPPLEMENT THE TOTAL AMOUNT REQUIRED. TOPSOIL FROM THE SITE MAY BE REJECTED IF IT HAS NOT BEEN PROPERLY REMOVED, STORED AND PROTECTED PRIOR TO CONSTRUCTION.

8.3. CONTRACTOR SHALL FURNISH TO THE APPROVING AGENCY AN ANALYSIS OF BOTH IMPORTED AND ON-SITE TOPSOIL TO BE UTILIZED IN ALL PLANTING AREAS. THE PH AND NUTRIENT LEVELS MAY NEED TO BE ADJUSTED THROUGH SOIL MODIFICATIONS AS NEEDED TO ACHIEVE THE REQUIRED LEVELS AS SPECIFIED IN THE MATERIALS SECTION ABOVE.

8.4. ALL LAWN AREAS ARE TO BE CULTIVATED TO A DEPTH OF SIX INCHES (6"). ALL DEBRIS EXPOSED FROM EXCAVATION AND CULTIVATION SHALL BE DISPOSED OF IN ACCORDANCE WITH GENERAL WORK PROCEDURES SECTION ABOVE. THE FOLLOWING SHALL BE TILLED INTO THE TOP FOUR INCHES (4") IN TWO DIRECTIONS (QUANTITIES BASED ON A 1,000 SQUARE FOOT AREA - FOR BID PURPOSES ONLY [SEE SPECIFICATION 6.A.]):

8.4.1. 20 POUNDS 'GRO-POWER' OR APPROVED SOIL CONDITIONER/FERTILIZER

8.4.2. 20 POUNDS NITRO-FORM (COURSE) 38-0-0 BLUE CHIP OR APPROVED NITROGEN FERTILIZER

8.5. THE SPREADING OF TOPSOIL SHALL NOT BE CONDUCTED UNDER MUDDY OR FROZEN CONDITIONS.

9. PLANTING

9.1. INSOFAR THAT IT IS FEASIBLE, PLANT MATERIAL SHALL BE PLANTED ON THE DAY OF DELIVERY. IN THE EVENT THAT THIS IS NOT POSSIBLE, LANDSCAPE CONTRACTOR SHALL PROTECT UNINSTALLED PLANT MATERIAL. PLANTS SHALL NOT REMAIN UNPLANTED FOR LONGER THAN A THREE DAY PERIOD AFTER DELIVERY. PLANTS THAT WILL NOT BE PLANTED FOR A PERIOD OF TIME GREATER THAN THREE DAYS SHALL BE HEALED IN WITH TOPSOIL OR MULCH TO HELP PRESERVE ROOT MOISTURE.

9.2. PLANTING OPERATIONS SHALL BE PERFORMED DURING PERIODS WITHIN THE PLANTING SEASON WHEN WEATHER AND SOIL CONDITIONS ARE SUITABLE AND IN ACCORDANCE WITH ACCEPTED LOCAL PRACTICE. PLANTS SHALL NOT BE INSTALLED IN TOPSOIL THAT IS IN A MUDDY OR FROZEN CONDITION.

9.3. ANY INJURED ROOTS OR BRANCHES SHALL BE PRUNED TO MAKE CLEAN-CUT ENDS PRIOR TO PLANTING UTILIZING CLEAN, SHARP TOOLS. ONLY INJURED OR DISEASED BRANCHING SHALL BE REMOVED.

9.4. ALL PLANTING CONTAINERS, BASKETS AND NON-BIODEGRADABLE MATERIALS SHALL BE REMOVED FROM ROOT BALLS DURING PLANTING. NATURAL FIBER BURLAP MUST BE CUT FROM AROUND THE TRUNK OF THE TREE AND FOLDED DOWN AGAINST THE ROOT BALL PRIOR TO BACKFILLING.

9.5. POSITION TREES AND SHRUBS AT THEIR INTENDED LOCATIONS AS PER THE PLANS AND SECURE THE APPROVAL OF THE LANDSCAPE ARCHITECT PRIOR TO EXCAVATING PITS, MAKING NECESSARY ADJUSTMENTS AS DIRECTED.

9.6. PRIOR TO THE ISSUANCE OF ANY CERTIFICATE OF OCCUPANCY, THE PROPOSED LANDSCAPE, AS SHOWN ON THE APPROVED LANDSCAPE PLAN, MUST BE INSTALLED, INSPECTED AND APPROVED BY THE APPROVING AGENCY. THE APPROVING AGENCY SHALL TAKE INTO ACCOUNT SEASONAL CONSIDERATIONS IN THIS REGARD AS FOLLOWS. THE PLANTING OF TREES, SHRUBS, VINES OR GROUND COVER SHALL OCCUR ONLY DURING THE FOLLOWING PLANTING SEASONS:

9.6.1. PLANTS: MARCH 15 TO DECEMBER 15

9.6.2. LAWN: MARCH 15 TO JUNE 15 OR SEPT. 1 TO DECEMBER 1

9.6.3. PLANTINGS REQUIRED FOR A CERTIFICATE OF OCCUPANCY SHALL BE PROVIDED DURING THE NEXT APPROPRIATE SEASON AT THE MUNICIPALITY'S DISCRETION. CONTRACTOR SHOULD CONTACT APPROVING AGENCY FOR POTENTIAL SUBSTITUTIONS.

9.7. FURTHERMORE, THE FOLLOWING TREE VARIETIES ARE UNUSUALLY SUSCEPTIBLE TO WINTER DAMAGE. WITH TRANSPLANT SHOCK AND THE SEASONAL LACK OF NITROGEN AVAILABILITY, THE RISK OF PLANT DEATH IS GREATLY INCREASED. IT IS NOT RECOMMENDED THAT THESE SPECIES BE PLANTED DURING THE FALL PLANTING SEASON:

ACER RUBRUM	PLATANUS X ACERIFOLIA
BETULA VARIETIES	POPULUS VARIETIES
CARPINUS VARIETIES	PRUNUS VARIETIES
CRATAEGUS VARIETIES	PYRUS VARIETIES
KOELREUTERIA	QUERCUS VARIETIES
LIQUIDAMBAR STYRACIFLUA	TILIA TOMENTOSA
LIRIODENDRON TULIPIFERA	ZELKOVA VARIETIES

9.8. PLANTING PITS SHALL BE DUG WITH LEVEL BOTTOMS, WITH THE WIDTH TWICE THE DIAMETER OF ROOT BALL. THE ROOT BALL SHALL REST ON UNDISTURBED GRADE. EACH PLANT PIT SHALL BE BACKFILLED IN LAYERS WITH THE FOLLOWING PREPARED SOIL MIXED THOROUGHLY:

9.8.1. 1 PART PEAT MOSS

9.8.2. 1 PART COMPOSTED COW MANURE BY VOLUME

9.8.3. 3 PARTS TOPSOIL BY VOLUME

9.8.4. 21 GRAMS 'AGRIFORM' PLANTING TABLETS (OR APPROVED EQUAL) AS FOLLOWS:

9.8.4.1. 2 TABLETS PER 1 GALLON PLANT

9.8.4.2. 3 TABLETS PER 5 GALLON PLANT

9.8.4.3. 4 TABLETS PER 15 GALLON PLANT

9.8.4.4. LARGER PLANTS: 2 TABLETS PER ½" CALIPER OF TRUNK

9.9. FILL PREPARED SOIL AROUND BALL OF PLANT HALF-WAY AND INSERT PLANT TABLETS. COMPLETE BACKFILL AND WATER THOROUGHLY.

9.10. ALL PLANTS SHALL BE PLANTED SO THAT THE TOP OF THE ROOT BALL, THE POINT AT WHICH THE ROOT FLARE BEGINS, IS SET AT GROUND LEVEL AND IN THE CENTER OF THE PIT. NO SOIL IS TO BE PLACED DIRECTLY ON TOP OF THE ROOT BALL.

9.11. ALL PROPOSED TREES DIRECTLY ADJACENT TO WALKWAYS OR DRIVEWAYS SHALL BE PRUNED AND MAINTAINED TO A MINIMUM BRANCHING HEIGHT OF 7' FROM GRADE.

9.12. GROUND COVER AREAS SHALL RECEIVE A ¼" LAYER OF HUMUS RAKED INTO THE TOP 1" OF PREPARED SOIL PRIOR TO PLANTING. ALL GROUND COVER AREAS SHALL BE WEEDED AND TREATED WITH A PRE-EMERGENT CHEMICAL AS PER MANUFACTURER'S RECOMMENDATION.

9.13. NO PLANT, EXCEPT GROUND COVERS, GRASSES OR VINES, SHALL BE PLANTED LESS THAN TWO FEET (2') FROM EXISTING STRUCTURES AND SIDEWALKS.

9.14. ALL PLANTING AREAS AND PLANTING PITS SHALL BE MULCHED AS SPECIFIED HEREIN TO FILL THE ENTIRE BED AREA OR SAUCER. NO MULCH IS TO TOUCH THE TRUNK OF THE TREE OR SHRUB.

9.15. ALL PLANTING AREAS SHALL BE WATERED IMMEDIATELY UPON INSTALLATION IN ACCORDANCE WITH THE WATERING SPECIFICATIONS AS LISTED HEREIN.

10. TRANSPLANTING (WHEN REQUIRED)

10.1. ALL TRANSPLANTS SHALL BE DUG WITH INTACT ROOT BALLS CAPABLE OF SUSTAINING THE PLANT.

10.2. IF PLANTS ARE TO BE STOCKPILED BEFORE REPLANTING, THEY SHALL BE HEALED IN WITH MULCH OR SOIL, ADEQUATELY WATERED AND PROTECTED FROM EXTREME HEAT, SUN AND WIND.

10.3. PLANTS SHALL NOT BE DUG FOR TRANSPLANTING BETWEEN APRIL 10 AND JUNE 30.

10.4. UPON REPLANTING, BACKFILL SOIL SHALL BE AMENDED WITH FERTILIZER AND ROOT GROWTH HORMONE.

10.5. TRANSPLANTS SHALL BE GUARANTEED FOR THE LENGTH OF THE GUARANTEE PERIOD SPECIFIED HEREIN.

10.6. F TRANSPLANTS DIE, SHRUBS AND TREES LESS THAN SIX INCHES (6") DBH SHALL BE REPLACED IN KIND. TREES GREATER THAN SIX INCHES (6") DBH MAY BE REQUIRED TO BE REPLACED IN ACCORDANCE WITH THE MUNICIPALITY'S TREE REPLACEMENT GUIDELINES.

11. WATERING

11.1. NEW PLANTINGS OR LAWN AREAS SHALL BE ADEQUATELY IRRIGATED BEGINNING IMMEDIATELY AFTER PLANTING. WATER SHALL BE APPLIED TO EACH TREE AND SHRUB IN SUCH MANNER AS NOT TO DISTURB BACKFILL AND TO THE EXTENT THAT ALL MATERIALS IN THE PLANTING HOLE ARE THOROUGHLY SATURATED. WATERING SHALL CONTINUE AT LEAST UNTIL PLANTS ARE ESTABLISHED.

11.2. SITE OWNER SHALL PROVIDE WATER IF AVAILABLE ON SITE AT TIME OF PLANTING. IF WATER IS NOT AVAILABLE ON SITE, CONTRACTOR SHALL SUPPLY ALL NECESSARY WATER. THE USE OF WATERING BAGS IS RECOMMENDED FOR ALL NEWLY PLANTED TREES.

11.3. IF AN IRRIGATION SYSTEM HAS BEEN INSTALLED ON THE SITE, IT SHALL BE USED TO WATER PROPOSED PLANT MATERIAL, BUT ANY FAILURE OF THE SYSTEM DOES NOT ELIMINATE THE CONTRACTOR'S RESPONSIBILITY OF MAINTAINING THE DESIRED MOISTURE LEVEL FOR VIGOROUS, HEALTHY GROWTH.

12. GUARANTEE

12.1. THE LANDSCAPE CONTRACTOR SHALL GUARANTEE ALL PLANTS FOR A PERIOD OF 1 YEAR FROM APPROVAL OF LANDSCAPE INSTALLATION BY THE APPROVING AGENCY. CONTRACTOR SHALL SUPPLY THE OWNER WITH A MAINTENANCE BOND FOR TEN PERCENT (10%) OF THE VALUE OF THE LANDSCAPE INSTALLATION WHICH WILL BE RELEASED AT THE CONCLUSION OF THE GUARANTEE PERIOD AND WHEN A FINAL INSPECTION HAS BEEN COMPLETED AND APPROVED BY THE OWNER OR AUTHORIZED REPRESENTATIVE.

12.2. ANY DEAD OR DYING PLANT MATERIAL SHALL BE REPLACED FOR THE LENGTH OF THE GUARANTEE PERIOD. REPLACEMENT OF PLANT MATERIAL SHALL BE CONDUCTED AT THE FIRST SUCCEEDING PLANTING SEASON. ANY DEBRIS SHALL BE DISPOSED OF OFF-SITE, WITHOUT EXCEPTION.

12.3. TREES AND SHRUBS SHALL BE MAINTAINED BY THE CONTRACTOR DURING CONSTRUCTION AND THROUGHOUT THE 90 DAY MAINTENANCE PERIOD AS SPECIFIED HEREIN. CULTIVATION, WEEDING, WATERING AND THE PREVENTATIVE TREATMENTS SHALL BE PERFORMED AS NECESSARY TO KEEP PLANT MATERIAL IN GOOD CONDITION AND FREE OF INSECTS AND DISEASE.

12.4. LAWNS SHALL BE MAINTAINED THROUGH WATERING, FERTILIZING, WEEDING, MOWING, TRIMMING AND OTHER OPERATIONS SUCH AS ROLLING, REGARDING AND REPLANTING AS REQUIRED TO ESTABLISH A SMOOTH, ACCEPTABLE LAWN, FREE OF ERODED OR BARE AREAS.

13. CLEANUP

13.1. UPON THE COMPLETION OF ALL LANDSCAPE INSTALLATION AND BEFORE THE FINAL ACCEPTANCE, THE CONTRACTOR SHALL REMOVE ALL UNUSED MATERIALS, EQUIPMENT AND DEBRIS FROM THE SITE. ALL PAVED AREAS ARE TO BE CLEANED.

13.2. THE SITE SHALL BE CLEANED AND LEFT IN A NEAT AND ACCEPTABLE CONDITION AS APPROVED BY THE OWNER OR AUTHORIZED REPRESENTATIVE.

14. MAINTENANCE (ALTERNATIVE BID):

14.1. A 90 DAY MAINTENANCE PERIOD SHALL COMMENCE AT THE END OF ALL LANDSCAPE INSTALLATION OPERATIONS. THE 90 DAY MAINTENANCE PERIOD ENSURES TO THE OWNER/OPERATOR THAT THE NEWLY INSTALLED LANDSCAPING HAS BEEN MAINTAINED AS SPECIFIED ON THE APPROVED LANDSCAPE PLAN. ONCE THE INITIAL 90 DAY MAINTENANCE PERIOD HAS EXPIRED, THE OWNER/OPERATOR MAY REQUEST THAT BIDDERS SUBMIT AN ALTERNATE MAINTENANCE BID FOR A MONTHLY MAINTENANCE CONTRACT. THE ALTERNATE MAINTENANCE CONTRACT WILL ENCOMPASS ANY WORK THAT IS CONSIDERED APPROPRIATE TO ENSURE THAT PLANT AND LAWN AREAS ARE HEALTHY AND MANICURED TO THE APPROVAL OF THE OWNER/OPERATOR.

TREE PLANTING DETAIL

N.T.S.

NOTES:
1.) NO SOIL OR MULCH SHALL BE PLACED AGAINST ROOT COLLAR OF PLANT.
2.) REMOVE ALL NON-BIODEGRADABLE MATERIAL AND ROPE FROM TRUNK & TOP OF ROOT BALL. FOLD BURLAP BACK 1/3 FROM ROOT BALL.
3.) PLANTING DEPTH SHALL BE THE SAME AS GROWN IN NURSERY.
4.) THOROUGHLY SOAK THE TREE ROOT BALL AND ADJACENT PREPARED SOIL SEVERAL TIMES DURING THE FIRST MONTH AFTER PLANTING AND REGULARLY THROUGHOUT THE FOLLOWING TWO SUMMERS.
5.) THE BOTTOM OF PLANTING PIT EXCAVATIONS SHOULD BE ROUGH TO AVOID MATTING OF SOIL LAYERS AS NEW SOIL IS ADDED. IT IS PREFERABLE TO TILL THE FIRST LIFT (2 TO 3 IN.) OF PLANTING SOIL INTO THE SUBSOIL.
6.) REFER TO THE CHART "GENERAL RANGE OF SOIL MODIFICATIONS & VOLUMES FOR VARIOUS SOIL CONDITIONS" TO DETERMINE MINIMUM WIDTH OF PREPARED SOIL (X).
7.) SUBSTITUTE ARBORVITAE STAKING SYSTEM WHEN SPECIFIED.

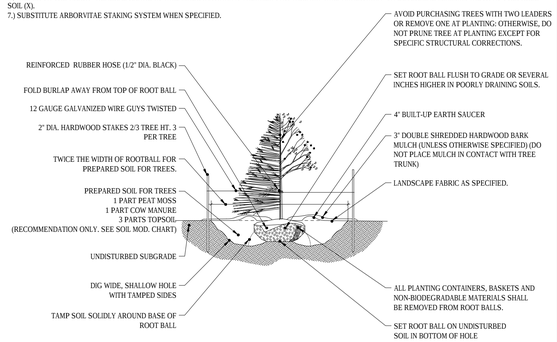

TREE PROTECTION DURING SITE CONSTRUCTION

N.T.S.

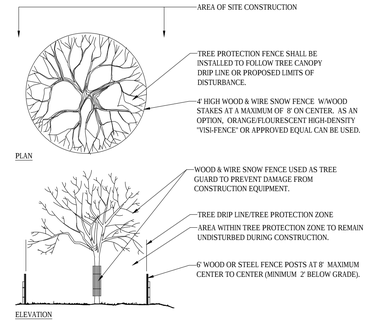

SHRUB PLANTING DETAIL

N.T.S.

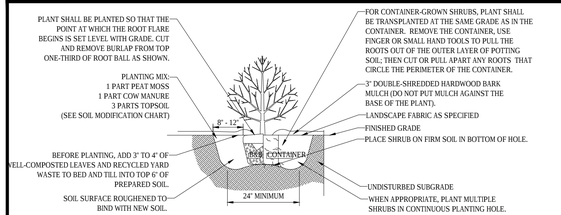

BIOBARRIER ROOT BARRIER DETAIL

N.T.S.

NOTES:
1. ANY TREE INSTALLED WITHIN 10 FT. OF NEW CONCRETE SIDEWALKS SHOULD BE INSTALLED WITH BIOBARRIER ROOT BARRIER FABRIC AS SHOWN
2. TREES SHALL BE INSTALLED ACCORDING TO THE APPROPRIATE PLANTING DETAIL.

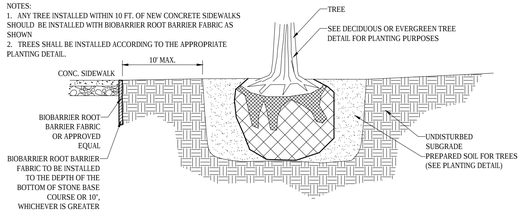

GROUNDCOVER PLANTING

N.T.S.

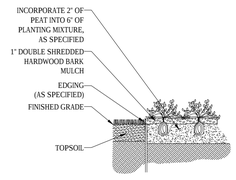

TREE PLANTING DETAIL - ON SLOPE

N.T.S.

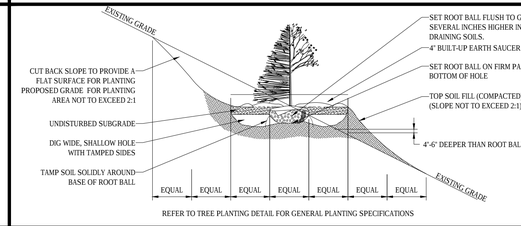
EXISTING GRADE
CUT BACK SLOPE TO PROVIDE A FLAT SURFACE FOR PLANTING PROPOSED GRADE FOR PLANTING AREA NOT TO EXCEED 2:1
UNDISTURBED SUBGRADE
DIG WIDE, SHALLOW HOLE WITH TAMPED SIDES
TAMP SOIL SOLIDLY AROUND BASE OF ROOT BALL
SET ROOT BALL FLUSH TO GRADE OR SEVERAL INCHES HIGHER IN POORLY DRAINING SOILS.
4" BUILT-UP EARTH SAUCER
SET ROOT BALL ON FIRM PAD IN BOTTOM OF HOLE
TOP SOIL FILL (COMPACTED) (SLOPE NOT TO EXCEED 2:1)
4"-6" DEEPER THAN ROOT BALL
EQUAL EQUAL E

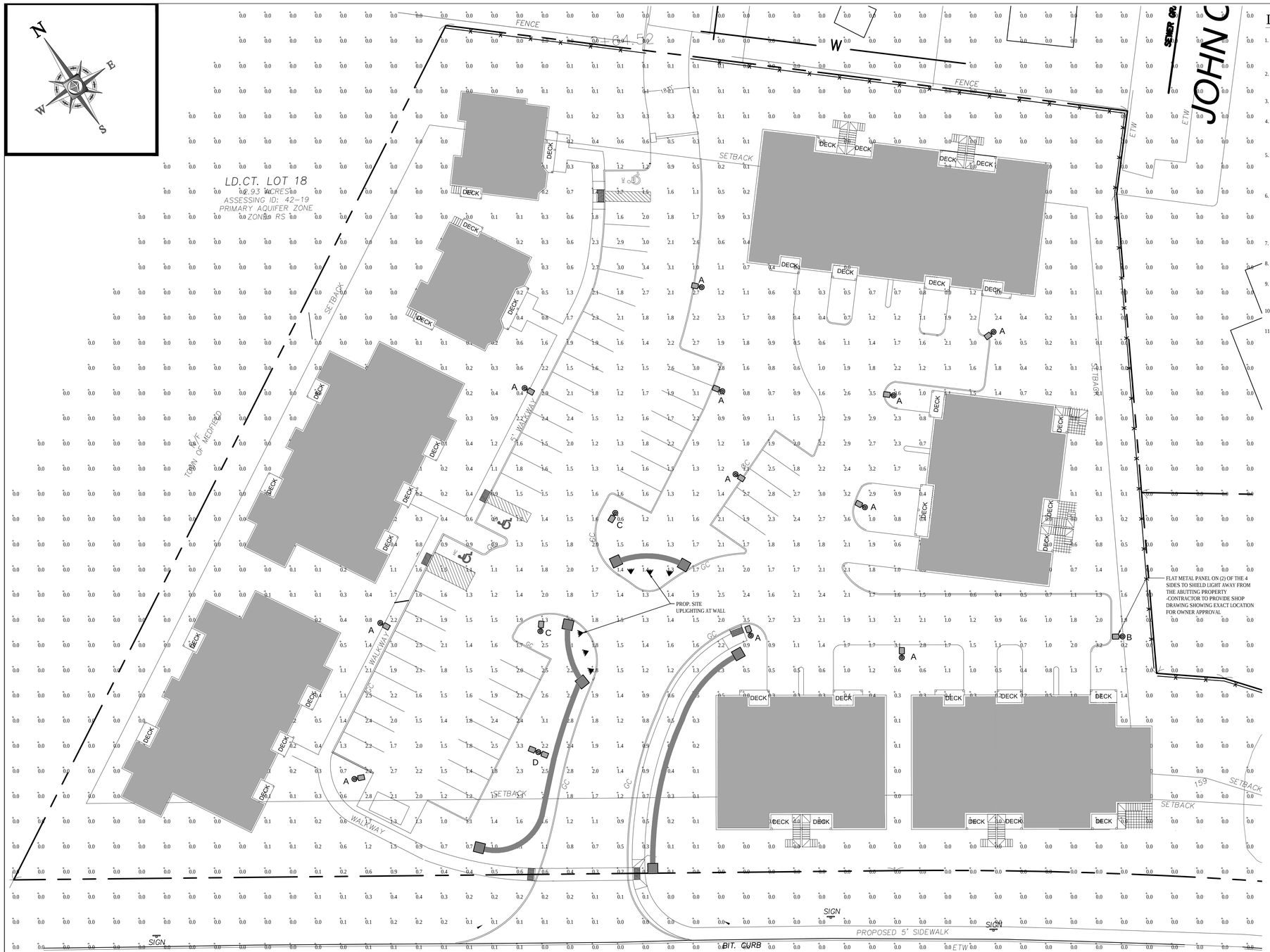

LIGHTING NOTES:

1. THIS LIGHTING PLAN DEPICTS PROPOSED SUSTAINED ILLUMINATION LEVELS CALCULATED USING DATA PROVIDED BY THE NOTED MANUFACTURER(S). ACTUAL SUSTAINED SITE ILLUMINATION LEVELS AND PERFORMANCE OF LUMINAIRES MAY VARY DUE TO VARIATIONS IN WEATHER, ELECTRICAL VOLTAGE, TOLERANCE IN LAMPS, THE SERVICE LIFE OF EQUIPMENT AND LUMINAIRES AND OTHER RELATED VARIABLE FIELD CONDITIONS.
2. THE LIGHT LOSS FACTORS USED IN THESE LIGHTING CALCULATIONS ARE 0.90 FOR ALL LED LUMINAIRES, 0.80 FOR ALL HIGH PRESSURE SODIUM LUMINAIRES OR 0.72 FOR ALL METAL HALIDE LUMINAIRES UNLESS OTHERWISE SPECIFIED. THESE FACTORS ARE INDICATIVE OF TYPICAL LIGHTING INDUSTRY MODELING STANDARDS.
3. THE LIGHTING VALUES AND CALCULATION POINTS DEPICTED ON THIS PLAN ARE ALL ANALYZED ON A HORIZONTAL GEOMETRIC PLANE AT ELEVATION ZERO (GROUND LEVEL) UNLESS OTHERWISE NOTED. THE VALUES DEPICTED ON THIS PLAN ARE IN FOOTCANDLES.
4. THE LUMINAIRES, LAMPS AND LENSES MUST BE REGULARLY INSPECTED/MAINTAINED TO ENSURE THAT THEY FUNCTION PROPERLY. THIS WORK SHOULD INCLUDE, BUT NOT BE LIMITED TO, FREQUENT VISUAL INSPECTIONS, CLEANING OF LENSES, AND RELAMPING (IF NECESSARY) AT LEAST ONCE EVERY SIX (6) MONTHS. FAILURE TO FOLLOW THE ABOVE STEPS COULD CAUSE THE LUMINAIRES, LAMPS AND LENSES TO FAIL PROPERLY TO FUNCTION.
5. WHERE APPLICABLE, THE EXISTING CONDITION LIGHT LEVELS ILLUSTRATED ARE REPRESENTATIVE OF AN APPROXIMATION UTILIZING LABORATORY DATA FOR SIMILAR FIXTURES, UNLESS ACTUAL FIELD MEASUREMENTS ARE TAKEN WITH A LIGHT METER AND ARE, CONSEQUENTLY, APPROXIMATIONS ONLY. DUE TO FACTORS SUCH AS FIXTURE MAINTENANCE, EQUIPMENT TOLERANCES, WEATHER CONDITIONS, ETC, ACTUAL LIGHT LEVELS MAY DIFFER. EXISTING LIGHT LEVELS DEPICTED ON THIS PLAN SHOULD BE CONSIDERED APPROXIMATE.
6. THIS LIGHTING PLAN IS INTENDED TO SHOW THE LOCATIONS AND TYPE OF LUMINAIRES, ONLY. POWER SYSTEM, CONDUITS, WIRING, VOLTAGES AND OTHER ELECTRICAL COMPONENTS ARE THE RESPONSIBILITY OF THE ARCHITECT, MEP AND/OR LIGHTING CONTRACTOR, AS INDICATED IN THE CONSTRUCTION CONTRACT DOCUMENTS. THESE ITEMS MUST BE INSTALLED AS REQUIRED BY STATE AND LOCAL REGULATIONS. LIGHT POLE BASES ARE THE RESPONSIBILITY OF THE STRUCTURAL ENGINEER, AS INDICATED IN THE CONSTRUCTION CONTRACT DOCUMENTS. CONTRACTOR IS RESPONSIBLE FOR INSTALLING LIGHTING FIXTURES AND APPURTENANCES IN ACCORDANCE WITH ALL APPLICABLE BUILDING AND ELECTRICAL CODES AND ALL OTHER APPLICABLE RULES, REGULATIONS, LAWS AND STATUTES.
7. CONTRACTOR MUST BRING TO DESIGNER'S ATTENTION, PRIOR TO THE COMMENCEMENT OF CONSTRUCTION, ANY LIGHT LOCATIONS THAT CONFLICT WITH DRAINAGE, UTILITIES, OR OTHER STRUCTURES.
8. IT IS LIGHTING CONTRACTOR'S RESPONSIBILITY TO COORDINATE WITH THE PROJECT ARCHITECT OR OWNER REGARDING THE POWER SOURCE(S) FROM WITHIN THE BUILDING, AND TIMING DEVICES NECESSARY TO MEET THE DESIGN INTENT.
9. THE LIGHTING CONTRACTOR SHALL COMPLY WITH ALL APPLICABLE CONTRACTOR REQUIREMENTS INDICATED IN THE SITE PLAN, INCLUDING BUT NOT LIMITED TO, GENERAL NOTES, GRADING AND UTILITY NOTES, SITE SAFETY, AND ALL GOVERNMENTAL RULES, LAWS, ORDINANCES, REGULATIONS AND THE LIKE.
10. THE CONTRACTOR MUST VERIFY THAT INSTALLATION OF LIGHTING FIXTURES COMPLIES WITH THE REQUIREMENTS FOR SEPARATION FROM OVERHEAD ELECTRICAL WIRES PER STATE REGULATIONS.
11. UPON OWNER'S ACCEPTANCE OF THE COMPLETED PROJECT, THE OWNER SHALL BE RESPONSIBLE FOR ALL MAINTENANCE, SERVICING, REPAIR AND INSPECTION OF THE LIGHTING SYSTEM AND ALL OF ITS COMPONENTS AND RELATED SYSTEMS, TO ENSURE ADEQUATE LIGHTING LEVELS ARE PRESENT AND FUNCTIONING AT ALL TIMES.

FLAT METAL PANEL ON (2) OF THE 4 SIDES TO SHIELD LIGHT AWAY FROM THE ABUTTING PROPERTY
-CONTRACTOR TO PROVIDE SHOP DRAWING SHOWING EXACT LOCATION FOR OWNER APPROVAL



STREET LIGHT FIXTURE OR APPROVED EQUAL

SIGN UPLIGHT OR APPROVED EQUAL

THIS PLAN TO BE UTILIZED FOR LIGHTING PURPOSES ONLY

20 10 5 0 20
1"= 20'

NUMERIC SUMMARY

LABEL	CALCTYPE	UNITS	AVG	MAX	MIN	AVG/MIN	MAX/MIN
AREA SUMMARY	ILLUMINANCE	FC	1.63	3.6	0.2	8.15	18.00

LUMINAIRE SCHEDULE

SYMBOL	QTY	ARRANGEMENT	LUMENS	LLF	DESCRIPTION
A	12	SINGLE	5870	0.90	1843-XRLED CARSON CITY SERIES TYPE III 1843-XRLED-12L45T3-MDL21-CSA MOUNTED @ 14'
B	1	SINGLE W/SHIELD	5870	0.90	1843-XRLED CARSON CITY SERIES TYPE III WITH FLAT PANEL ON TWO SIDES 1843-XRLED-12L45T3-MDL21-CSA-HSS MOUNTED @ 14'
C	2	SINGLE	6245	0.90	1843-XRLED CARSON CITY SERIES TYPE V 1843-XRLED-12L45T5-MDL21-CSA MOUNTED @ 14'
D	1	DOUBLE	6245	0.90	1843-XRLED CARSON CITY SERIES TYPE V 1843-XRLED-12L45T5-MDL21-CSA MOUNTED @ 14'

811 Know what's below. Call before you dig.

Date issued:

01-10-19

WINSLOW ARCHITECTS INC
89 MASSACHUSETTS AVE.
ARLINGTON, MA 02474
P: 781 648.6600
F: 781 648.6601
www.winslowarchitects.com

Owner/Developer:

MEDFIELD MEADOWS LLC

12 Haven Street
Dover, MA 02030

Project:

MEDFIELD GREEN

Meadow Road / Dale Street
Medfield, MA 02052

Drawing:

LIGHTING PLAN

Revisions:

No.	Description	Date
2	REV 2	03/29/2019

ANY REPRODUCTION, POSSESSION OR USE OF THIS DRAWING WITHOUT THE WRITTEN PERMISSION OF WINSLOW ARCHITECTS INC. IS PROHIBITED. VIOLATORS WILL BE PROSECUTED TO THE FULL EXTENT OF THE LAW.
© 2018 WINSLOW ARCHITECTS, INC.

Stamp:

Project number:

16-515

Sheet:

L-3

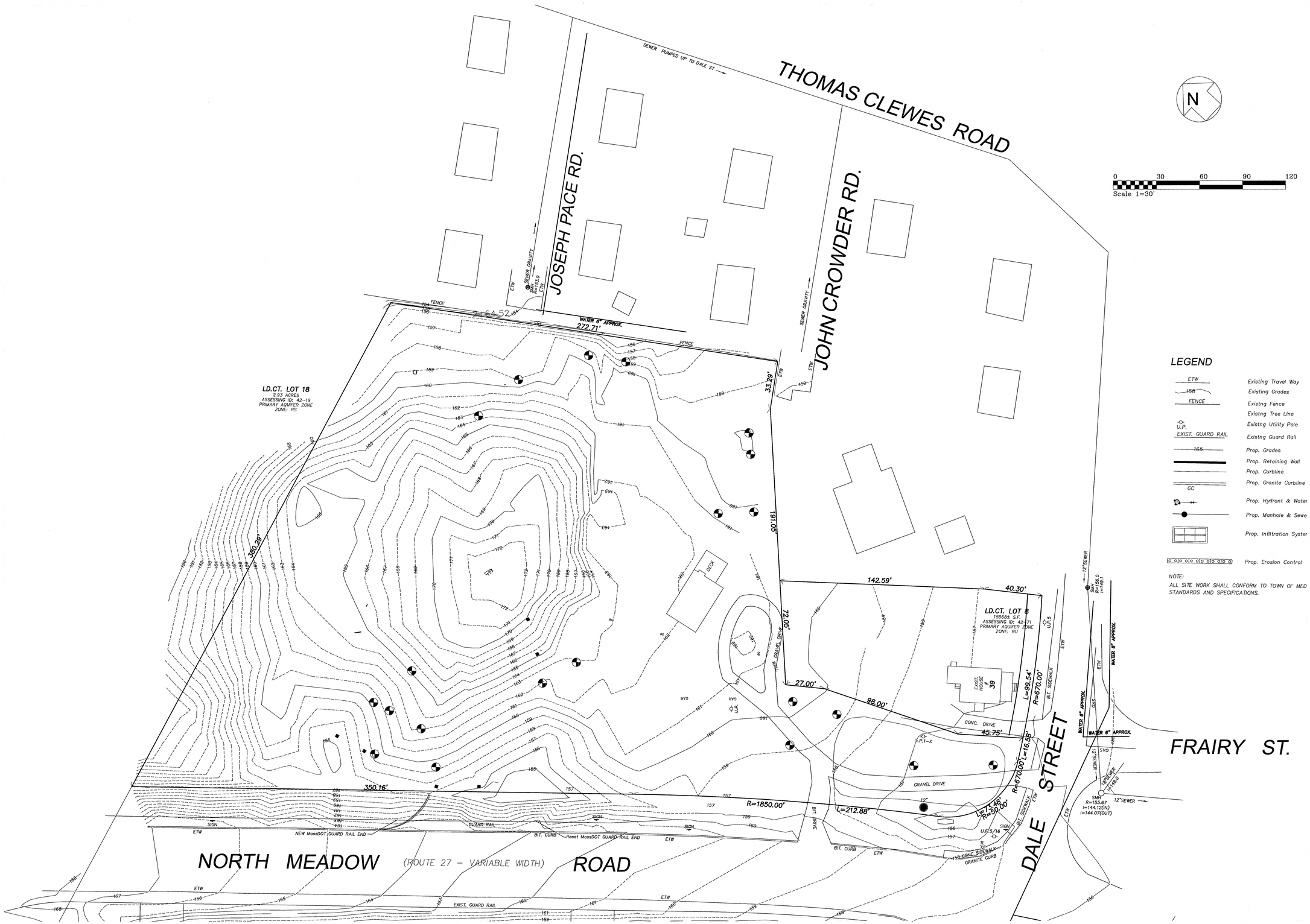

LEGEND

- ETW — Existing Travel Way
- 158 — Existing Grades
- FENCE — Existng Fence
- Existng Tree Line
- U.P. — Existng Utility Pole
- EXIST. GUARD RAIL — Existng Guard Rail
- 165 — Prop. Grades
- Prop. Retaining Wall
- Prop. Curbline
- GC — Prop. Granite Curbline
- Prop. Hydrant & Water
- Prop. Manhole & Sewe
- Prop. Infiltration Syster
- Prop. Erosion Control

NOTE:
ALL SITE WORK SHALL CONFORM TO TOWN OF MED STANDARDS AND SPECIFICATIONS.

Date issued:
7-15-19

WINSLOW ARCHITECTS INC
89 MASSACHUSETTS AVE.
ARLINGTON, MA 02474
P: 781 648.6600
F: 781 648.6601
www.winslowarchitects.com

Owner/Developer:
MEDFIELD MEADOWS LLC

12 Haven Street
Dover, MA 02030

Project:
MEDFIELD GREEN

Meadow Road / Dale Street
Medfield, MA 02052

Drawing:
EXISTING CONDITIONS

Revisions:

No.	Description	Date

ANY REPRODUCTION, POSSESSION OR USE OF THIS DRAWING WITHOUT THE WRITTEN PERMISSION OF WINSLOW ARCHITECTS INC. IS PROHIBITED. VIOLATORS WILL BE PROSECUTED TO THE FULL EXTENT OF THE LAW.

© 2018 WINSLOW ARCHITECTS, INC.

Stamp:
COMMONWEALTH OF MASSACHUSETTS
RONALD THIERI
CIVIL
No. 34773
REGISTERED PROFESSIONAL ENGINEER

Project number:
16-515

Sheet:
C-100

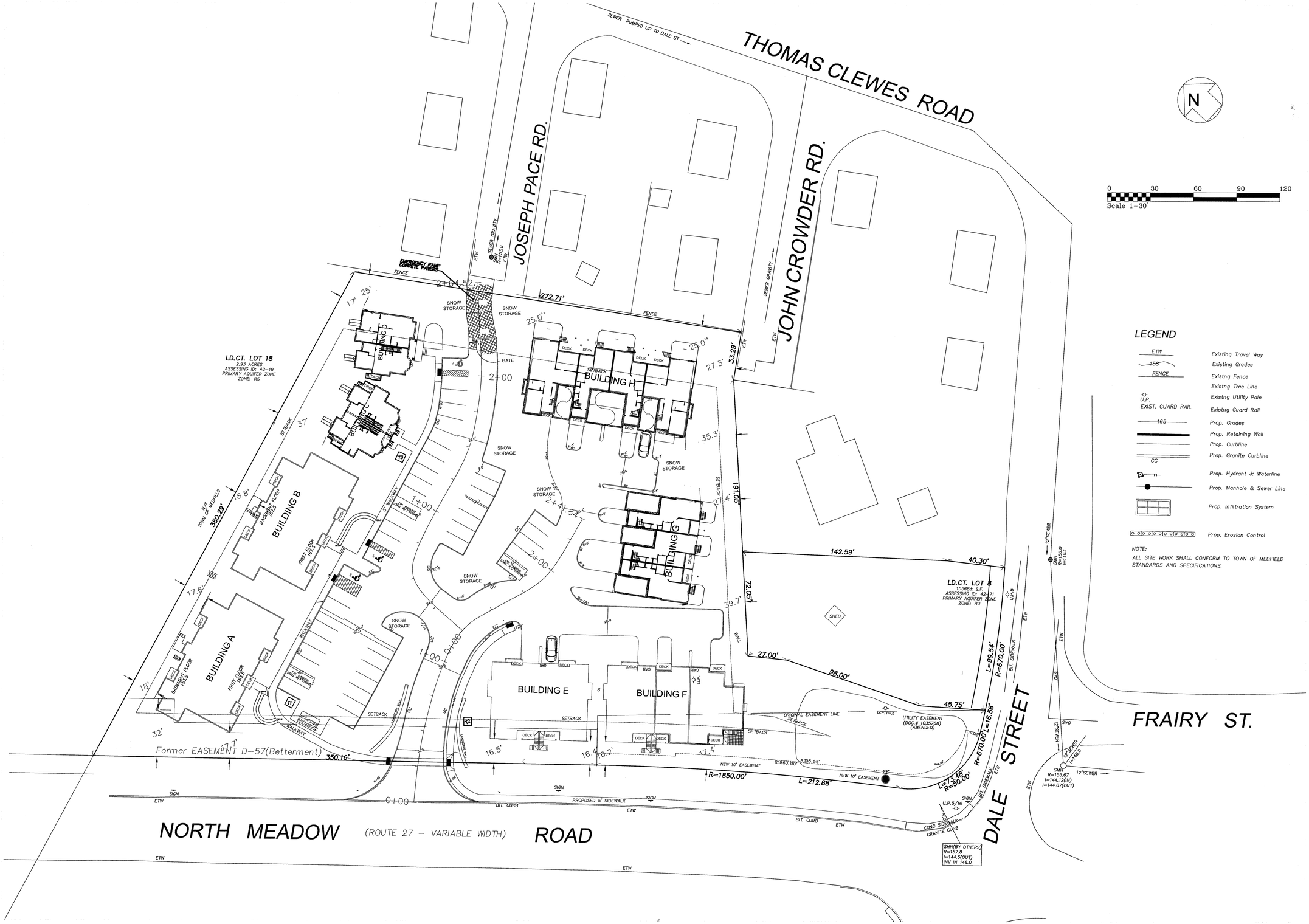

LEGEND

ETW	Existing Travel Way
158	Existing Grades
FENCE	Existng Fence
	Existng Tree Line
U.P.	Existng Utility Pole
EXIST. GUARD RAIL	Existng Guard Rail
165	Prop. Grades
	Prop. Retaining Wall
	Prop. Curbline
GC	Prop. Granite Curbline
	Prop. Hydrant & Waterline
	Prop. Manhole & Sewer Line
	Prop. Infiltration System
	Prop. Erosion Control

NOTE:
ALL SITE WORK SHALL CONFORM TO TOWN OF MEDFIELD STANDARDS AND SPECIFICATIONS.

Date issued:
7-15-19

WINSLOW ARCHITECTS INC
89 MASSACHUSETTS AVE.
ARLINGTON, MA 02474
P: 781 648.6600
F: 781 648.6601
www.winslowarchitects.com

Owner/Developer:
MEDFIELD MEADOWS LLC
12 Haven Street
Dover, MA 02030

Project:
MEDFIELD GREEN
Meadow Road / Dale Street
Medfield, MA 02052

Drawing:
SITE PLAN PROPOSED LAYOUT

Revisions:

No.	Description	Date
	BETA COMMENTS	3/15/19

ANY REPRODUCTION, POSSESSION OR USE OF THIS DRAWING WITHOUT THE WRITTEN PERMISSION OF WINSLOW ARCHITECTS INC. IS PROHIBITED. VIOLATORS WILL BE PROSECUTED TO THE FULL EXTENT OF THE LAW.
© 2018 WINSLOW ARCHITECTS, INC.

Stamp:
COMMONWEALTH OF MASSACHUSETTS
DONALD PIERI
CIVIL
No. 34173
REGISTERED PROFESSIONAL ENGINEER

Project number:
16-515

Sheet:
C-200

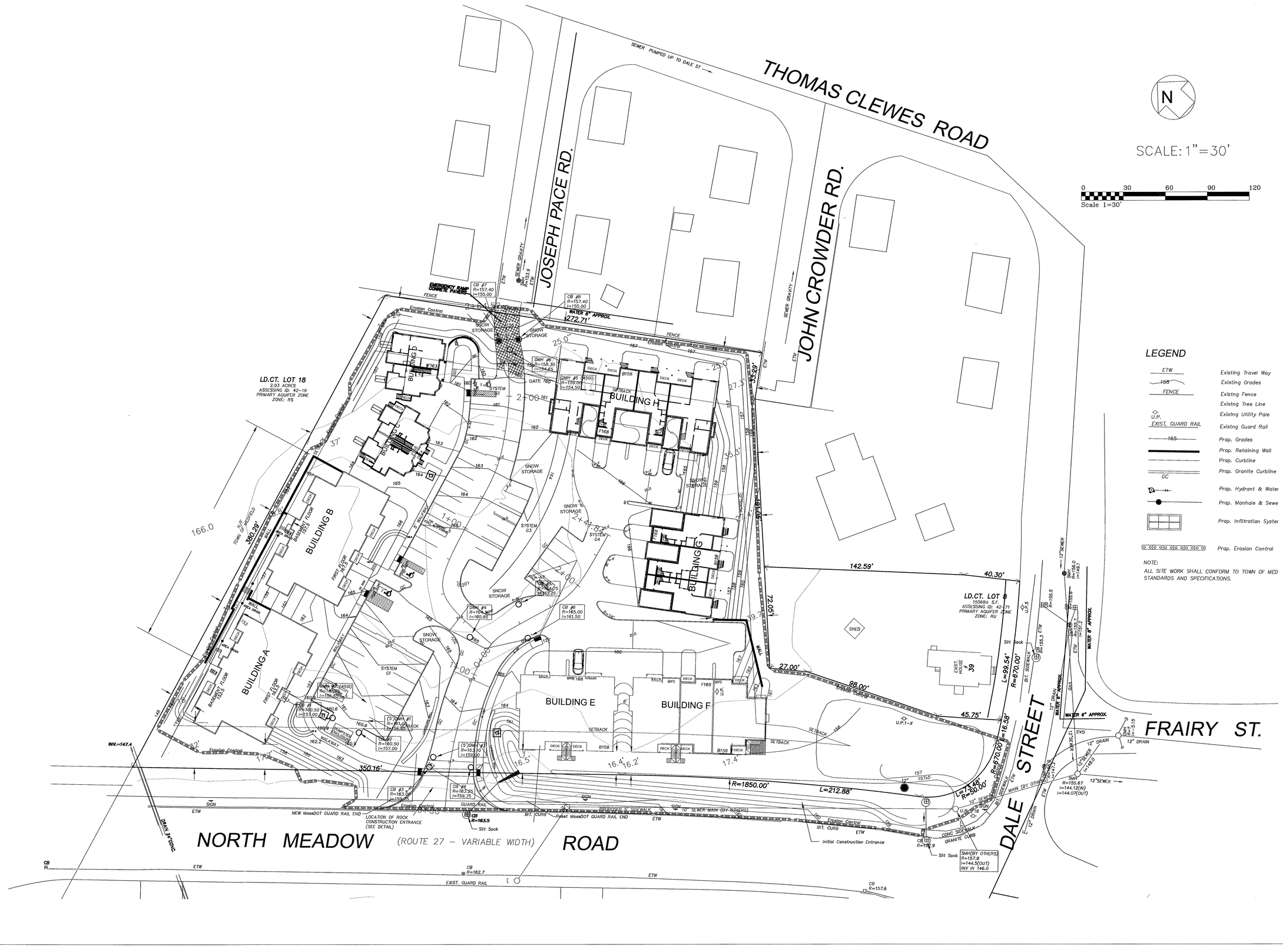

LEGEND

ETW	Existing Travel Way
158	Existing Grades
FENCE	Existng Fence
	Existng Tree Line
U.P.	Existng Utility Pole
EXIST. GUARD RAIL	Existng Guard Rail
165	Prap. Grades
	Prap. Retaining Wall
	Prap. Curbline
GC	Prap. Granite Curbline
	Prap. Hydrant & Water
	Prap. Manhale & Sewe
	Prap. Infiltration Syster
	Prap. Erasian Contral

NOTE:
ALL SITE WORK SHALL CONFORM TO TOWN OF MED STANDARDS AND SPECIFICATIONS.

Date issued:

7–15–19

WINSLOW ARCHITECTS INC

89 MASSACHUSETTS AVE.
ARLINGTON, MA 02474

P: 781 648.6600
F: 781 648.6601

www.winslowarchitects.com

Owner/Developer:

MEDFIELD MEADOWS LLC

12 Haven Street
Dover, MA 02030

Project:

MEDFIELD GREEN

Meadow Road / Dale Street
Medfield, MA 02052

Drawing:

GRADING & EROSION CONTROL

Revisions:

No.	Description	Date
	BETA COMMENTS	3/15/19

ANY REPRODUCTION, POSSESSION OR USE OF THIS DRAWING WITHOUT THE WRITTEN PERMISSION OF WINSLOW ARCHITECTS INC. IS PROHIBITED. VIOLATORS WILL BE PROSECUTED TO THE FULL EXTENT OF THE LAW.

© 2018 WINSLOW ARCHITECTS, INC.

Stamp:

COMMONWEALTH OF MASSACHUSETTS
RONALD TIBERI
CIVIL
No. 34128
REGISTERED PROFESSIONAL ENGINEER

Project number:

16–515

Sheet:

C–300

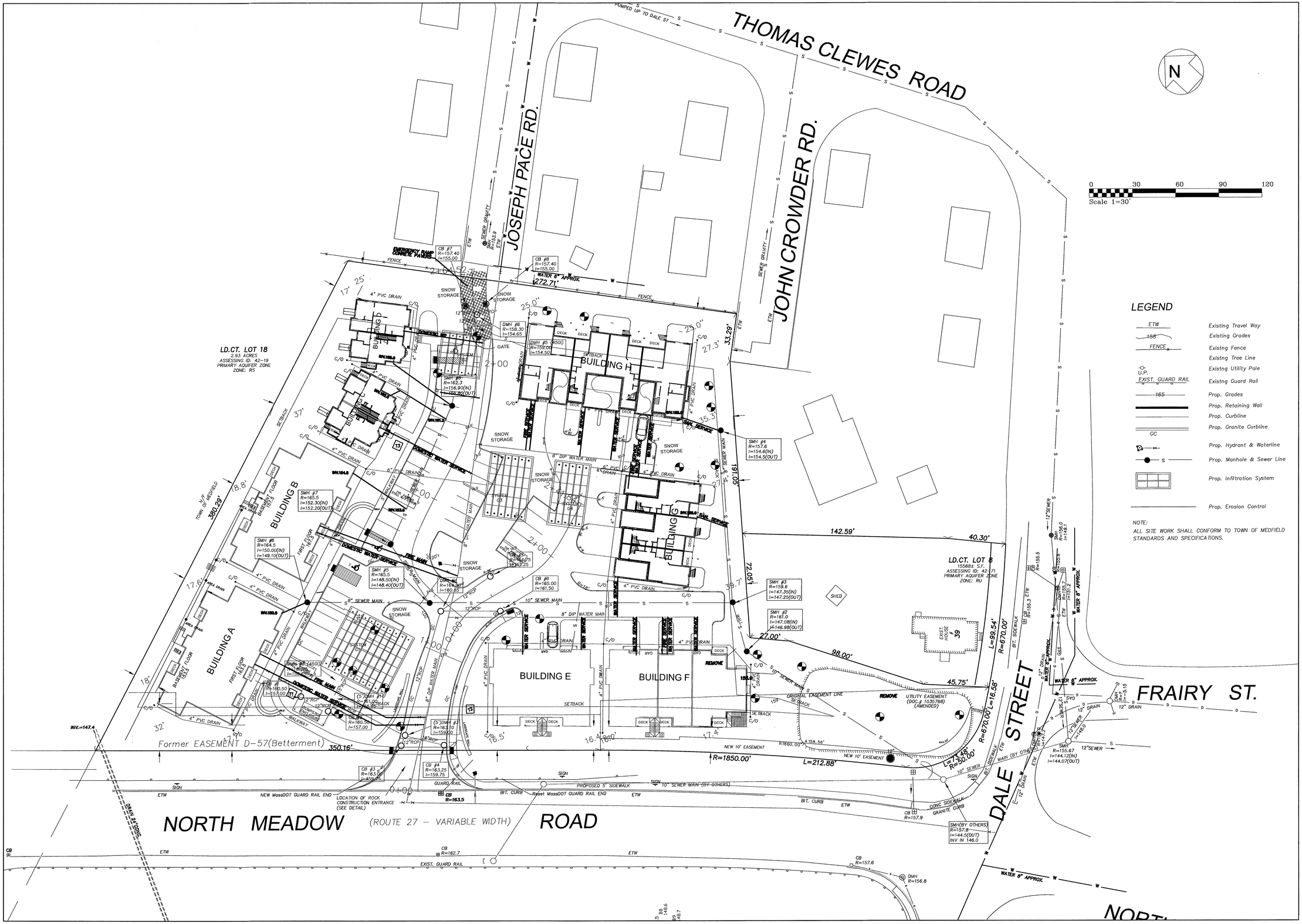

Date issued:

7–15–19

WINSLOW ARCHITECTS INC

89 MASSACHUSETTS AVE.
ARLINGTON, MA 02474

P: 781 648.8600
F: 781 648.8601

www.winslowarchitects.com

Owner/Developer:

MEDFIELD MEADOWS LLC

12 Haven Street
Dover, MA 02030

Project:

MEDFIELD GREEN

Meadow Road / Dale Street
Medfield, MA 02052

Drawing:

UTILITY PLAN

Revisions:

No.	Description	Date
	SEWER ALIGNMENT	3/15/19

ANY REPRODUCTION, POSSESSION OR USE OF THIS DRAWING WITHOUT THE WRITTEN PERMISSION OF WINSLOW ARCHITECTS INC. IS PROHIBITED. VIOLATORS WILL BE PROSECUTED TO THE FULL EXTENT OF THE LAW.

© 2018 WINSLOW ARCHITECTS, INC.

Stamp:

Project number:

16–515

Sheet:

C–400

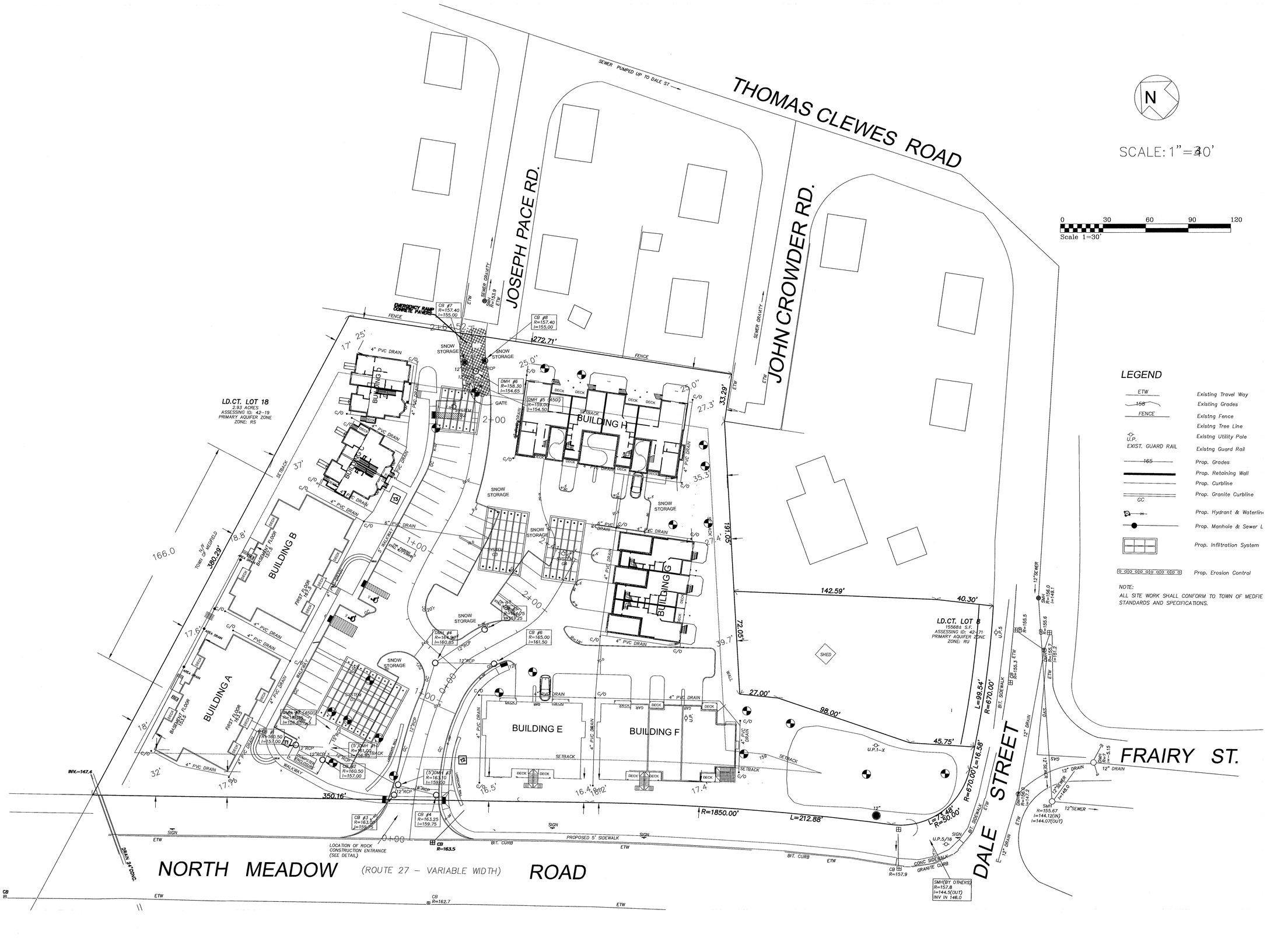

LEGEND

ETW	Existing Travel Way
158	Existing Grades
FENCE	Existng Fence
	Existng Tree Line
U.P.	Existng Utility Pole
EXIST. GUARD RAIL	Existng Guard Rail
165	Prop. Grades
	Prop. Retaining Wall
	Prop. Curbline
GC	Prop. Granite Curbline
	Prop. Hydrant & Waterlin
	Prop. Manhole & Sewer L
	Prop. Infiltration System
	Prop. Erosion Control

NOTE:
ALL SITE WORK SHALL CONFORM TO TOWN OF MEDFIE STANDARDS AND SPECIFICATIONS.

Date issued:
7–15–19

WINSLOW ARCHITECTS INC

89 MASSACHUSETTS AVE.
ARLINGTON, MA 02474
P: 781 648.6600
F: 781 648.6601
www.winslowarchitects.com

Owner/Developer:
MEDFIELD MEADOWS LLC
12 Haven Street
Dover, MA 02030

Project:
MEDFIELD GREEN

Meadow Road / Dale Street
Medfield, MA 02052

Drawing:
DRAINAGE PLAN

Revisions:

No.	Description	Date
	BETA COMMENTS	3/15/19

ANY REPRODUCTION, POSSESSION OR USE OF THIS DRAWING WITHOUT THE WRITTEN PERMISSION OF WINSLOW ARCHITECTS INC. IS PROHIBITED. VIOLATORS WILL BE PROSECUTED TO THE FULL EXTENT OF THE LAW.
© 2018 WINSLOW ARCHITECTS, INC.

Stamp:
COMMONWEALTH OF MASSACHUSETTS
RONALD ROBERT CIVIL No. 34773
REGISTERED PROFESSIONAL ENGINEER

Project number:
16–515

Sheet:
C - 500

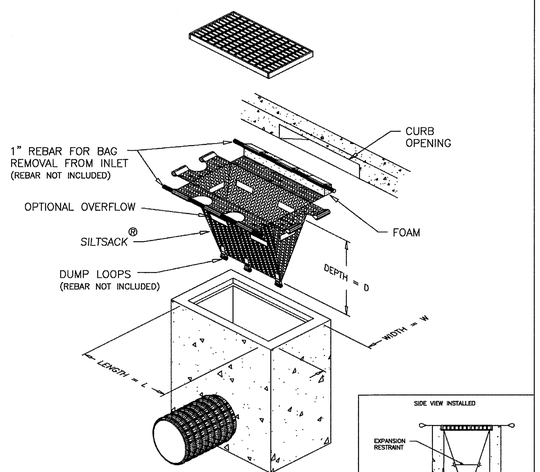

DETAIL OF INLET SEDIMENT CONTROL DEVICE WITH CURB DEFLECTOR

SPECIFICATIONS

NOTE: THE SILTSACK ® WILL BE MANUFACTURED FROM A WOVEN POLYPROPYLENE FABRIC THAT MEETS OR EXCEEDS THE FOLLOWING SPECIFICATIONS.

(FOR AREAS OF LOW TO MODERATE PRECIPITATION AND RUN-OFF)

PROPERTIES	TEST METHOD	UNITS
GRAB TENSILE STRENGTH	ASTM D-4632	300 LBS
GRAB TENSILE ELONGATION	ASTM D-4632	20 %
PUNCTURE	ASTM D-4833	120 LBS
MULLEN BURST	ASTM D-3786	800 PSI
TRAPEZOID TEAR	ASTM D-4533	120 LBS
UV RESISTANCE	ASTM D-4355	80 %
APPARENT OPENING SIZE	ASTM D-4751	40 US SIEVE
FLOW RATE	ASTM D-4491	40 GAL/MIN/SQ FT
PERMITTIVITY	ASTM D-4491	0.55 SEC -1

(FOR AREAS OF MODERATE TO HEAVY PRECIPITATION AND RUN-OFF)

PROPERTIES	TEST METHOD	UNITS
GRAB TENSILE STRENGTH	ASTM D-4632	265 LBS
GRAB TENSILE ELONGATION	ASTM D-4632	20 %
PUNCTURE	ASTM D-4833	135 LBS
MULLEN BURST	ASTM D-3786	420 PSI
TRAPEZOID TEAR	ASTM D-4533	45 LBS
UV RESISTANCE	ASTM D-4355	90 %
APPARENT OPENING SIZE	ASTM D-4751	20 US SIEVE
FLOW RATE	ASTM D-4491	200 GAL/MIN/SQ FT
PERMITTIVITY	ASTM D-4491	1.5 SEC -1

(FOR AREAS WHERE THERE IS A CONCERN FOR OIL RUN-OFF OR SPILLS)

DEPENDING ON YOUR PARTICULAR APPLICATION, THE SILTSACK ® CAN BE MADE FROM EITHER ONE OF THE ABOVE FABRICS WITH AN OIL-ABSORBANT PILLOW INSERT OR, MADE COMPLETELY FROM AN OIL-ABSORBANT SILTSACK® WITH A WOVEN PILLOW INSERT.

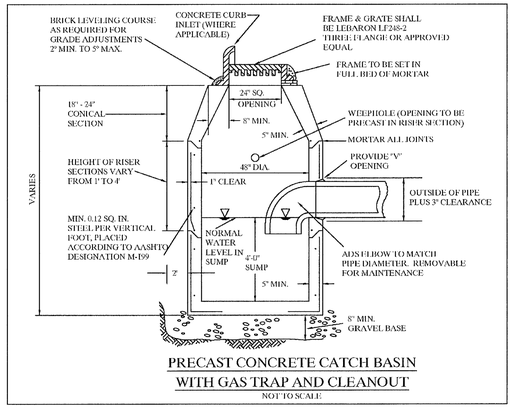

PRECAST CONCRETE CATCH BASIN WITH GAS TRAP AND CLEANOUT

NOT TO SCALE

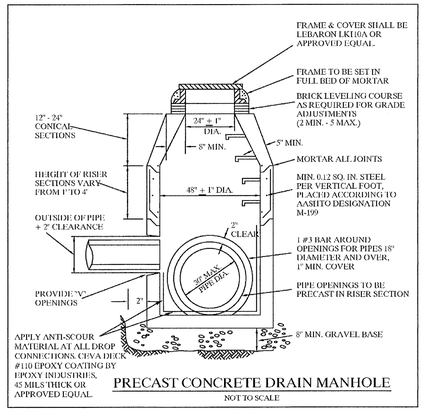

PRECAST CONCRETE DRAIN MANHOLE

NOT TO SCALE

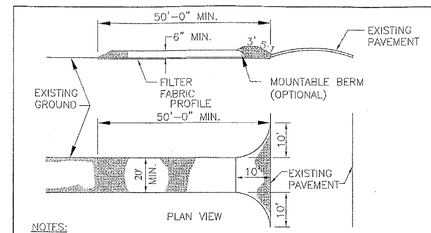

NOTES:

1. STONE SIZE – USE 2" STONE, OR RECLAIMED OR RECYCLED CONCRETE EQUIVALENT.
2. LENGTH – AS REQUIRED, BUT NOT LESS THAN 50 FEET (EXCEPT ON A SINGLE RESIDENCE LOT WHERE A 30 FOOT MINIMUM LENGTH WOULD APPLY).
3. THICKNESS – NOT LESS THAN SIX (6) INCHES.
4. WIDTH –TWENTY (20) FOOT MINIMUM, BUT NOT LESS THAN THE FULL WIDTH AT POINTS WHERE INGRESS OR EGRESS OCCURS.
5. FILTER FABRIC – WILL BE PLACED OVER THE ENTIRE AREA PRIOR TO PLACING OF STONE. FILTER WILL NOT BE REQUIRED ON A SINGLE FAMILY RESIDENCE LOT.
6. SURFACE WATER – ALL SURFACE WATER FLOWING OR DIVERTED TOWARD CONSTRUCTION ENTRANCES SHALL BE PIPED ACROSS THE ENTRANCE. IF PIPE IS IMPRACTICAL, A MOUNTABLE BERM WITH 5:1 SLOPES WILL BE PERMITTED.
7. MAINTENANCE – THE ENTRANCE SHALL BE MAINTAINED IN A CONDITION WHICH WILL PREVENT TRACKING OR FLOWING OF SEDIMENT ONTO PUBLIC RIGHTS-OF-WAY. THIS MAY REQUIRE PERIODIC TOP DRESSING WITH ADDITIONAL STONE AS CONDITIONS DEMAND AND REPAIR AND/OR CLEANOUT OF ANY MEASURES USED TO TRAP SEDIMENT. ALL SEDIMENT SPILLED, DROPPED, WASHED OR TRACKED ONTO PUBLIC RIGHT-OF-WAY MUST BE REMOVED IMMEDIATELY.
8. WASHING – WHEELS SHALL BE CLEANED TO REMOVE SEDIMENT PRIOR TO ENTRANCE ONTO PUBLIC RIGHTS-OF -WAY. WHEN WASHING IS REQUIRED, IT SHALL BE DONE ON AN AREA STABILIZED WITH STONE WHICH DRAINS INTO AN APPROVED SEDIMENT TRAPPING DEVICE.
9. PERIODIC INSPECTION AND NEEDED MAINTENANCE SHALL BE PROVIDED AFTER EACH RAIN EVENT.

STABILIZED CONSTRUCTION ENTRANCE
Not to Scale

ACCEPTABLE FILL MATERIALS: STORMTECH SC-740 CHAMBER SYSTEMS

	MATERIAL LOCATION	DESCRIPTION	AASHTO MATERIAL CLASSIFICATIONS	COMPACTION / DENSITY REQUIREMENT
D	**FINAL FILL:** FILL MATERIAL FOR LAYER 'D' STARTS FROM THE TOP OF THE 'C' LAYER TO THE BOTTOM OF FLEXIBLE PAVEMENT OR UNPAVED FINISHED GRADE ABOVE. NOTE THAT PAVEMENT SUBBASE MAY BE PART OF THE 'D' LAYER	ANY SOIL/ROCK MATERIALS, NATIVE SOILS, OR PER ENGINEER'S PLANS. CHECK PLANS FOR PAVEMENT SUBGRADE REQUIREMENTS.	N/A	PREPARE PER SITE DESIGN ENGINEER'S PLANS. PAVED INSTALLATIONS MAY HAVE STRINGENT MATERIAL AND PREPARATION REQUIREMENTS.
C	**INITIAL FILL:** FILL MATERIAL FOR LAYER 'C' STARTS FROM THE TOP OF THE EMBEDMENT STONE ('B' LAYER) TO 18" (450 mm) ABOVE THE TOP OF THE CHAMBER. NOTE THAT PAVEMENT SUBBASE MAY BE A PART OF THE 'C' LAYER.	GRANULAR WELL-GRADED SOIL/AGGREGATE MIXTURES, <35% FINES OR PROCESSED AGGREGATE. MOST PAVEMENT SUBBASE MATERIALS CAN BE USED IN LIEU OF THIS LAYER.	AASHTO M145[1] A-1, A-2-4, A-3 OR AASHTO M43[1] 3, 357, 4, 467, 5, 56, 57, 6, 67, 68, 7, 78, 8, 89, 9, 10	BEGIN COMPACTIONS AFTER 12" (300 mm) OF MATERIAL OVER THE CHAMBERS IS REACHED. COMPACT ADDITIONAL LAYERS IN 6" (150 mm) MAX LIFTS TO A MIN. 95% PROCTOR DENSITY FOR WELL GRADED MATERIAL AND 95% RELATIVE DENSITY FOR PROCESSED AGGREGATE MATERIALS. ROLLER GROSS VEHICLE WEIGHT NOT TO EXCEED 12,000 lbs (53 kN). DYNAMIC FORCE NOT TO EXCEED 20,000 lbs (89 kN).
B	**EMBEDMENT STONE:** FILL SURROUNDING THE CHAMBERS FROM THE FOUNDATION STONE ('A' LAYER) TO THE 'C' LAYER ABOVE.	CLEAN, CRUSHED, ANGULAR STONE	AASHTO M43[1] 3, 357, 4, 467, 5, 56, 57	NO COMPACTION REQUIRED.
A	**FOUNDATION STONE:** FILL BELOW CHAMBERS FROM THE SUBGRADE UP TO THE FOOT (BOTTOM) OF THE CHAMBER.	CLEAN, CRUSHED, ANGULAR STONE	AASHTO M43[1] 3, 357, 4, 467, 5, 56, 57	PLATE COMPACT OR ROLL TO ACHIEVE A FLAT SURFACE. [2,3]

PLEASE NOTE:
1. THE LISTED AASHTO DESIGNATIONS ARE FOR GRADATIONS ONLY. THE STONE MUST ALSO BE CLEAN, CRUSHED, ANGULAR. FOR EXAMPLE, A SPECIFICATION FOR #4 STONE WOULD STATE: "CLEAN, CRUSHED, ANGULAR NO. 4 (AASHTO M43) STONE".
2. STORMTECH COMPACTION REQUIREMENTS ARE MET FOR 'A' LOCATION MATERIALS WHEN PLACED AND COMPACTED IN 6" (150 mm) (MAX) LIFTS USING TWO FULL COVERAGES WITH A VIBRATORY COMPACTOR.
3. WHERE INFILTRATION SURFACES MAY BE COMPROMISED BY COMPACTION, FOR STANDARD DESIGN LOAD CONDITIONS, A FLAT SURFACE MAY BE ACHIEVED BY RAKING OR DRAGGING WITHOUT COMPACTION EQUIPMENT. FOR SPECIAL LOAD DESIGNS, CONTACT STORMTECH FOR COMPACTION REQUIREMENTS.

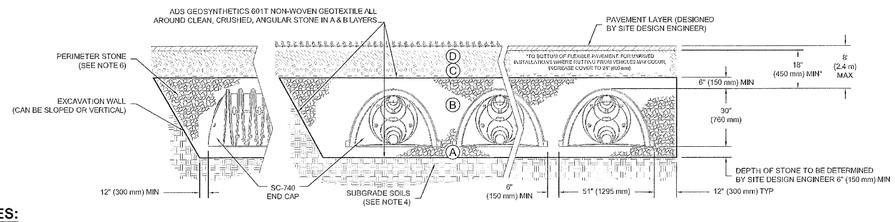

NOTES:

1. SC-740 CHAMBERS SHALL CONFORM TO THE REQUIREMENTS OF ASTM F2418 "STANDARD SPECIFICATION FOR POLYPROPYLENE (PP) CORRUGATED WALL STORMWATER COLLECTION CHAMBERS", OR ASTM F2922 "STANDARD SPECIFICATION FOR POLYETHYLENE (PE) CORRUGATED WALL STORMWATER COLLECTION CHAMBERS".
2. SC-740 CHAMBERS SHALL BE DESIGNED IN ACCORDANCE WITH ASTM F2787 "STANDARD PRACTICE FOR STRUCTURAL DESIGN OF THERMOPLASTIC CORRUGATED WALL STORMWATER COLLECTION CHAMBERS".
3. "ACCEPTABLE FILL MATERIALS" TABLE ABOVE PROVIDES MATERIAL LOCATIONS, DESCRIPTIONS, GRADATIONS, AND COMPACTION REQUIREMENTS FOR FOUNDATION, EMBEDMENT, AND FILL MATERIALS.
4. THE SITE DESIGN ENGINEER IS RESPONSIBLE FOR ASSESSING THE BEARING RESISTANCE (ALLOWABLE BEARING CAPACITY) OF THE SUBGRADE SOILS AND THE DEPTH OF FOUNDATION STONE WITH CONSIDERATION FOR THE RANGE OF EXPECTED SOIL MOISTURE CONDITIONS.
5. PERIMETER STONE MUST BE EXTENDED HORIZONTALLY TO THE EXCAVATION WALL FOR BOTH VERTICAL AND SLOPED EXCAVATION WALLS.
6. ONCE LAYER 'C' IS PLACED, ANY SOIL/MATERIAL CAN BE PLACED IN LAYER 'D' UP TO THE FINISHED GRADE. MOST PAVEMENT SUBBASE SOILS CAN BE USED TO REPLACE THE MATERIAL REQUIREMENTS OF LAYER 'C' OR 'D' AT THE SITE DESIGN ENGINEER'S DISCRETION.

System #	G1	G2	G3	G4
Top of stone	157.0	154.5	157.0	155.0
Top of structure	154.5	153.0	155.0	153.0
Invert of structure	152.0	150.5	152.5	150.5
Bottom of stone	149.0	148.5	149.5	149.5

SC-740 STANDARD CROSS SECTION

REV	DRW	CHK	DESCRIPTION
1	AJM	AJM	UPDATE

DATE: 11/18/14 DRAWN: JLM CHECKED: JLM PROJECT #:

THIS DRAWING HAS BEEN PREPARED BASED ON INFORMATION PROVIDED TO ADS AND/OR THE DIRECTION OF THE SITE DESIGN ENGINEER OR OTHER PROJECT REPRESENTATIVE. THE SITE DESIGN ENGINEER SHALL REVIEW THIS DRAWING PRIOR TO CONSTRUCTION. IT IS THE RESPONSIBILITY OF THE SITE DESIGN ENGINEER TO REVIEW THIS DRAWING IN CONJUNCTION WITH ALL OTHER DRAWINGS FOR THE PROJECT. THE SITE DESIGN ENGINEER SHALL INDEPENDENTLY VERIFY ALL QUANTITIES AND ELEVATIONS PRIOR TO CONSTRUCTION. ADS ASSUMES NO RESPONSIBILITY FOR ANY DEVIATIONS IN THE DRAWING RESULTING FROM DISCREPANCIES IN DATA PROVIDED TO ADS BY OTHERS.

Stormtech
Chamber Systems | Isolator Row | Cultec
20 Vreeland Road, Suite 2 | Florham Park, NJ 07932
P: 973-845-4044 | F: 973-845-4047 | 1-877-886-7835
www.stormtech.com

ADS
4640 TRUEMAN BLVD
HILLIARD, OH 43026
1-800-733-7473
www.ads-pipe.com

SHEET 1 OF 1

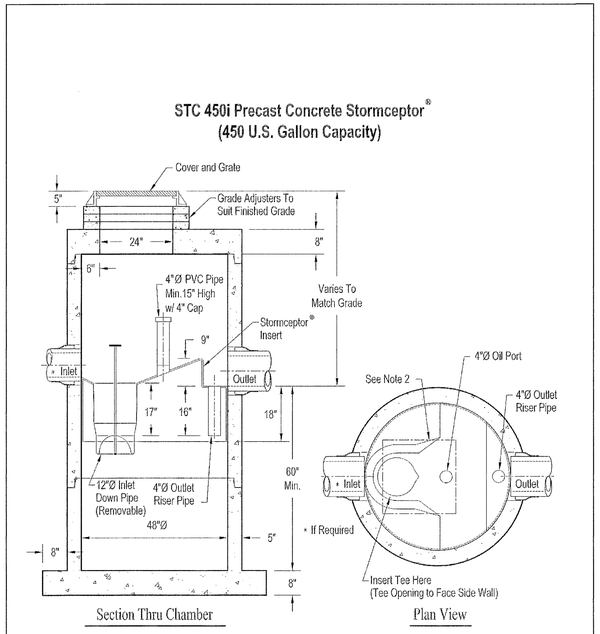

Notes:
1. The Use Of Flexible Connection is Recommended at The Inlet and Outlet Where Applicable.
2. The Cover Should be Positioned Over The Inlet Drop Pipe and The Oil Port.
3. The Stormceptor System is protected by one or more of the following U.S. Patents: #4985148, #5498331, #5725760, #5753115, #5849181, #6068765, #6371690.
4. Contact a Concrete Pipe Division representative for further details not listed on this drawing.

© 2019 Professional Services Corporation, PC

Date issued:

7–15–19

WINSLOW ARCHITECTS INC

89 MASSACHUSETTS AVE.
ARLINGTON, MA 02474

P: 781 648.6600
F: 781 648.6601

www.winslowarchitects.com

Owner/Developer:

MEDFIELD MEADOWS LLC

12 Haven Street
Dover, MA 02030

Project:

MEDFIELD GREEN

Meadow Road / Dale Street
Medfield, MA 02052

Drawing:

DETAIL SHEET

Revisions:

No.	Description	Date
1.	Review comments	2/28/19
2.	Review comments	3/15/19

ANY REPRODUCTION, POSSESSION OR USE OF THIS DRAWING WITHOUT THE WRITTEN PERMISSION OF WINSLOW ARCHITECTS INC. IS PROHIBITED. VIOLATORS WILL BE PROSECUTED TO THE FULL EXTENT OF THE LAW.

2018 WINSLOW ARCHITECTS, INC.

Stamp:

COMMONWEALTH OF MASSACHUSETTS
THOMAS C HOUSTON
CIVIL
No. 32469
REGISTERED PROFESSIONAL ENGINEER

March 29, 2019

Thomas C. Houston, PE

Digitally signed by Thomas C. Houston, PE
DN: cn=Thomas C. Houston, PE, o, ou=PSC, email=thoustonepspc.com, c=US

Project number:

16–515

Sheet:

C–DS–1

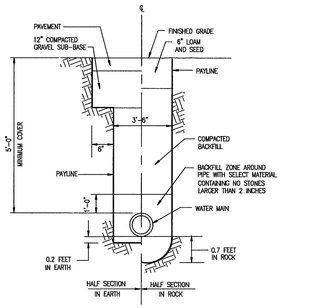

TRENCH DETAIL
(NOT TO SCALE)

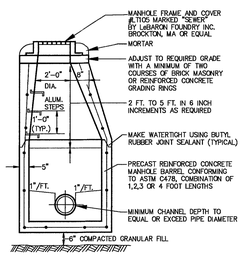

SEWER MANHOLE
(NOT TO SCALE)

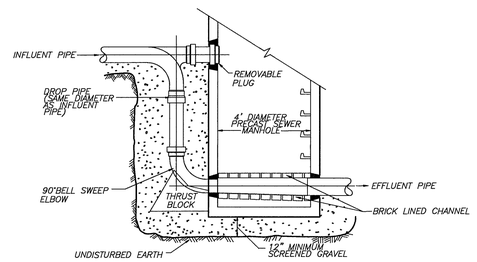

OUTSIDE DROP CONNECTION
(NOT TO SCALE)

NOTE:
1. ALL PIPE AND FITTINGS TO BE SAME SIZE AND MATERIAL AS INFLUENT PIPE.

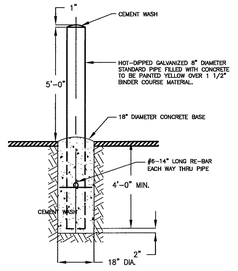

BOLLARD DETAIL
NOT TO SCALE

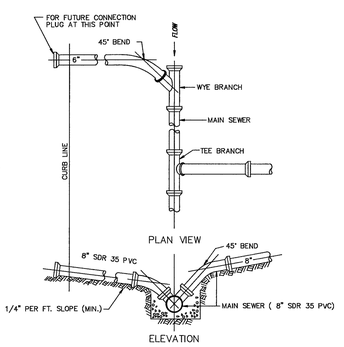

ELEVATION

SEWER SERVICE CONNECTION DETAIL
NOT TO SCALE

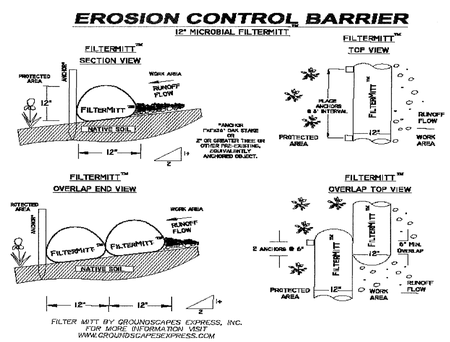

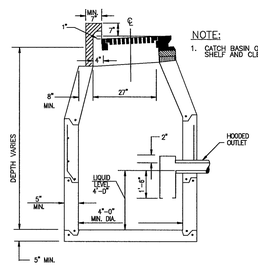

NOTE:
1. CATCH BASIN OPENING 27"x24" WITH NO SHELF AND CLEAR DROP.

CATCH BASIN WITH CURB INLET AND GREASE AND OIL TRAP DETAIL
NOT TO SCALE

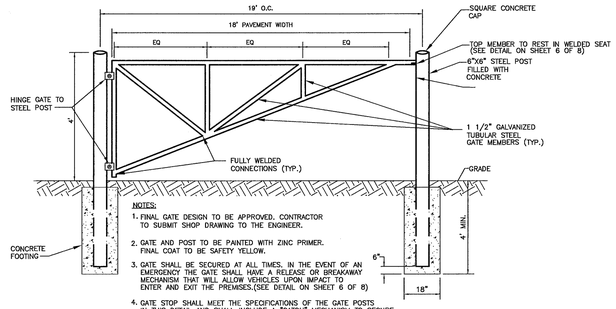

NOTES:
1. FINAL GATE DESIGN TO BE APPROVED. CONTRACTOR TO SUBMIT SHOP DRAWING TO THE ENGINEER.
2. GATE AND POST TO BE PAINTED WITH ZINC PRIMER. FINAL COAT TO BE SAFETY YELLOW.
3. GATE SHALL BE SECURED AT ALL TIMES. IN THE EVENT OF AN EMERGENCY THE GATE SHALL HAVE A RELEASE OR BREAKAWAY MECHANISM THAT WILL ALLOW VEHICLES UPON IMPACT TO ENTER AND EXIT THE PREMISES.(SEE DETAIL ON SHEET 6 OF 8)
4. GATE STOP SHALL MEET THE SPECIFICATIONS OF THE GATE POSTS IN THIS DETAIL AND SHALL INCLUDE A "CATCH" MECHANISM TO SECURE THE GATE WHEN FULLY OPENED. THE CATCH MECHANISM SHALL BE A STANDARD GALVANIZED STEEL GRAVITY LATCH OR EQUAL.

EMERGENCY ACCESS ROAD GATE DETAIL
NOT TO SCALE

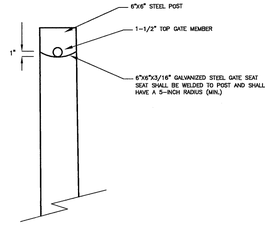

BREAKAWAY GATE DETAIL
NOT TO SCALE

NOTE:
GATE SHALL BE SECURED AT ALL TIMES. IN THE EVENT OF AN EMERGENCY THE GATE SHALL HAVE A RELEASE OR BREAKAWAY MECHANISM THAT WILL ALLOW VEHICLES UPON IMPACT TO ENTER AND EXIT THE PREMISES.(SEE DETAIL ON SHEET 6 OF 8)

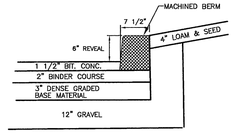

BITUMINOUS MACHINED BERM
NOT TO SCALE

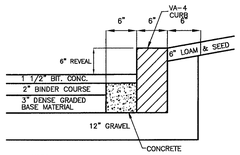

NOTE:
1. PLACE GRAVEL PRIOR TO SETTING OF EDGING.

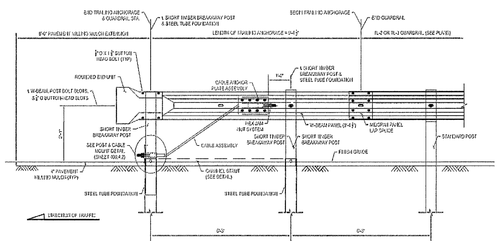

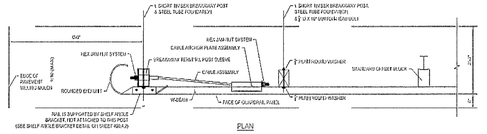

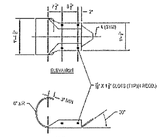

ROUNDED END UNIT

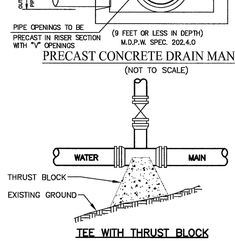

PRECAST CONCRETE DRAIN MANHOLE
(NOT TO SCALE)

TEE WITH THRUST BLOCK

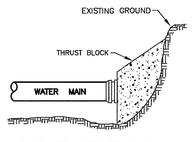

PLUG WITH THRUST BLOCK

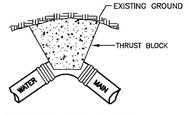

BEND WITH THRUST BLOCK

NOTES:
1. CONCRETE FOR THRUST BLOCKS SHALL HAVE A MINIMUM COMPRESSIVE STRENGTH OF 3000 PSI AT 28 DAYS.
2. THRUST BLOCK BEARING SURFACE AGAINST UNDISTURBED SOIL WILL DEPEND ON TYPE OF SOIL, TEST PRESSURE AND SIZE OF PIPE AND WILL BE DETERMINED BY THE NADPW.

THRUST BLOCK DETAILS
NOT TO SCALE

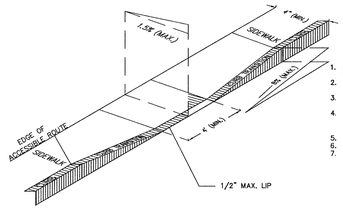

NOTES:
1. MAXIMUM ALLOWABLE ROUTE (SIDEWALK) AND CURB RAMP CROSS SLOPES SHALL BE 1.5%
2. THE MAXIMUM ALLOWABLE SLOPE OF ACCESSIBLE ROUTE EXCLUDING CURB RAMPS SHALL BE 5%.
3. THE MAXIMUM ALLOWABLE SLOPE OF ACCESSIBLE ROUTE CURB RAMPS SHALL BE 8%.
4. A MINIMUM OF 4 FEET CLEAR SHALL BE MAINTAINED AT ANY PERMANENT OBSTACLE IN ACCESSIBLE ROUTE (I.E. HYDRANTS, UTILITY POLES, TREE WELLS, SIGNS, ETC.)
5. CURB TREATMENT VARIES, SEE PLANS FOR CURB TYPE.
6. BASE OF RAMP SHALL BE GRADED TO PREVENT PONDING.
7. SEE TYPICAL SIDEWALK SECTION FOR RAMP CONSTRUCTION.

ACCESSIBLE CURB RAMP
N.T.S.

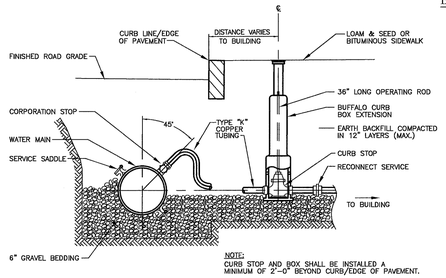

NOTE:
CURB STOP AND BOX SHALL BE INSTALLED A MINIMUM OF 2'-0" BEYOND CURB/EDGE OF PAVEMENT.

TYPICAL HOUSE SERVICE CONNECTION
(NOT TO SCALE)

NOTE:
1. ALL SERVICE CONNECTION FITTINGS SHALL BE BY THE MUELLER COMPANY.
2. ALL WORK AND MATERIALS SHALL CONFORM TO STANDARDS AND SPECIFICATIONS OF THE TOWN OF NORTH ATTLEBOROUGH'S DEPARTMENT OF PUBLIC WORKS.

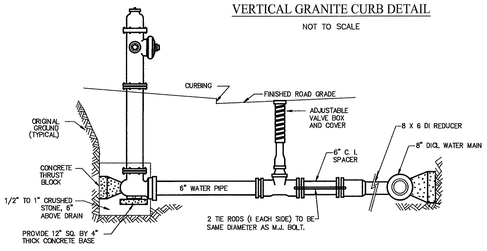

TYPICAL HYDRANT INSTALLATION
(NOT TO SCALE)

NOTES:
1. ONLY MUELLER, AMERICAN-DARLING B-62-B OR U.S. PIPE METROPOLITAN HYDRANTS CAN BE USED.
2. ALL WATER LINES WILL HAVE MEGA LUG OR EQUAL RESTRAINTS ON ALL UNRESTRAINED JOINTS.
3. TIE RODS TO BE USED IN PLACE OF TRUST BLOCK BLOCKS IN FILL AREAS OR WHERE EXISTING SOIL LACKS SUFFICIENT BEARING STRENGTH.

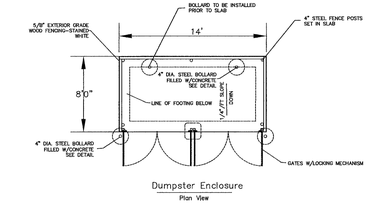

Dumpster Enclosure
Plan View

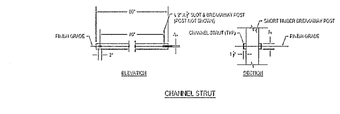

CHANNEL STRUT

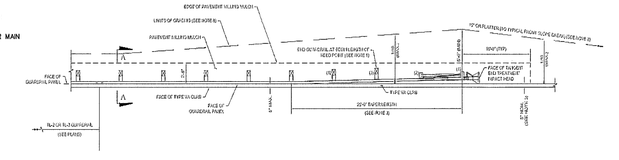

RADIUS

RADIUS	A	B
50'	25'	25'
75'	37.5'	37.5'
100'	50'	50'
125'	62.5'	62.5'
150'	75'	75'

RADIUS

RADIUS	A	B
50'	25'	25'
75'	37.5'	37.5'
100'	50'	50'
125'	62.5'	62.5'
150'	75'	75'

TANGENT END TREATMENT FOR GUARDRAIL ADJACENT TO CURB-PLAN

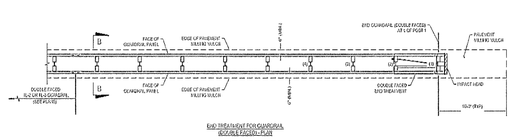

END TREATMENT FOR GUARDRAIL DOUBLE FACED-PLAN

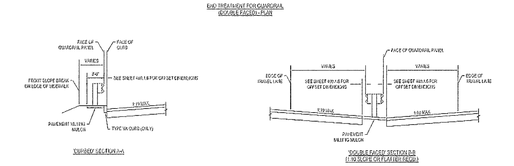

ROADWAY SECTION-A

DOUBLE FACED SECTION-B
(TO BE CUT OFF AT FIELD)

NOTES:
1. ORIENT GUARDRAIL AT ENDS SO AND SUPPORTS (ASSEMBLY AND RAILING RUN PARALLEL (IN PLAN) TO ADJACENT TRAVEL LANE (CENTERLINE WITH THE ARC TANGENT OF RADIUS POINT FOR SHELVED BREAKAWAY ENDS AT THE BEGINNING OF THE FLARE. SEE MANUFACTURERS PLAN DRAWINGS FOR END DETAILS. THE END UP IS 2' 0" AWAY FROM THE EDGE OF THE TRAVELED WAY (SEE NOTE 5 OF SHEET 6 OF 8).
2. FIELD REVIEW END TREATMENTS THAT VARY FROM STANDARD SHAPE FROM WHAT IS DESCRIBED IN THESE STANDARDS. HOWEVER, THE MAXIMUM SLOPES AND MINIMUM OFFSETS SHALL BE FOLLOWED FROM THE POINTS SHOWN ON THE SHELL LAYOUT.
3. END TREATMENT TOP SHOULD BE UPGRADED WITH THE PLANS.
4. CONSTRUCT ENDS OF ANY GUARDRAIL FACING AWAY FROM TRAFFIC SO THAT THE END OF THE GUARDRAIL DOES NOT PRESENT A SHARP EDGE TO APPROACHING TRAFFIC.
5. SEE SHEET 6 OF 8 FOR OFFSET FOR BREAKAWAY SUPPORT. WHERE SHELL IS WITHIN A RADIUS OF 100' FROM TO 200' FROM THE EDGE OF CURB TO WHERE THE GUARDRAIL BEGINS TO FLARE, THE OFFSET SHOULD EQUAL THE DISTANCE BETWEEN THE EDGE OF CURB AND THE EDGE OF GUARDRAIL. OFFSET BEGINS AT THE MAXIMUM FLARE.
6. END TREATMENTS SHALL NOT REDUCE THE DESIGNED GUARDRAIL DESIGNATION.
7. END TREATMENT SHOULD NOT BE USED WHERE PAVEMENT SLOPES EXCEED 10:1.
8. WHERE GUARDRAIL IS USED BETWEEN ADJACENT PARALLEL ROADWAYS, SUCH AS AN ENTRANCE AND EXIT RAMP OF A HIGHWAY, ADJACENT FRONTAGE ROADWAYS, OR BOTH SIDES OF A MEDIAN, SEPARATING ONE ROADWAY OR DIVIDED HIGHWAY, THE GUARDRAIL OF EACH ROADWAY SHALL BE CONTINUOUS. THE GUARDRAIL SHALL NOT BE DISCONTINUED AT THE CROSSOVERS SHOWN IN THESE DRAWINGS.

WINSLOW ARCHITECTS INC

89 MASSACHUSETTS AVE.
ARLINGTON, MA 02474

P: 781 648.6600
F: 781 648.6601

www.winslowarchitects.net

Date issued:
7-15-19

Owner/Developer:
MEDFIELD MEADOWS LLC

12 Haven Street
Dover, MA 02030

Project:
MEDFIELD GREEN

Meadow Road / Dale Street
Medfield, MA 02052

Drawing:
DETAIL SHEET

Revisions:

No.	Description	Date
1.	Review comments	2/28/19
2.	Review comments	3/15/19

ANY REPRODUCTION, POSSESSION OR USE OF THIS DRAWING WITHOUT THE WRITTEN PERMISSION OF WINSLOW ARCHITECTS INC. IS PROHIBITED. VIOLATORS WILL BE PROSECUTED TO THE FULL EXTENT OF THE LAW.

© 2018 WINSLOW ARCHITECTS, INC.

Stamp:

Project number:
16-515

Sheet:
C-DS-2

STRUCTURAL NOTES

A. GENERAL

1. ALL DESIGN AND CONSTRUCTION REQUIRED OF THE CONTRACTORS BY THE CONTRACT DOCUMENTS SHALL BE PERFORMED IN ACCORDANCE WITH THE GOVERNING BUILDING CODE AND OSHA REGULATIONS, SUPPLEMENTED BY THE CONTRACT DOCUMENTS. THE GOVERNING BUILDING CODE USED IN THE STRUCTURAL DESIGN IS THE MASSACHUSETTS STATE BUIILDING CODE, NINTH EDITION (MASSACHUSETTS AMENDMENDMENTS TO THE INTERNATIONAL BUILDING CODE 2015) WITH THE LATEST ADOPTED AMENDMENTS. WHERE THE EDITION OF THE REFERENCE STANDARDS CITED IN THESE NOTES IS NOT GIVEN, THE EDITION SHALL BE AS STATED IN THE GOVERNING BUILDING CODE, OR THE LATEST PUBLISHED EDITION IF NOT STATED IN THE GOVERNING BUILDING CODE.

2. WHERE "DESIGNS" ARE REQUIRED OF THE CONTRACTORS BY THE CONTRACT DOCUMENTS, THE DESIGNS SHALL BE PERFORMED IN ACCORDANCE WITH THE GOVERNING BUILDING CODE AND BY PROFESSIONAL ENGINEERS, REGISTERED IN THE DISCIPLINE OF THE DESIGNS THEY ARE PERFORMING AND IN THE STATE IN WHICH THE PROJECT IS LOCATED. SUCH DESIGNS SHALL BE PREPARED IN A DESIGN DOCUMENT FORMAT (NOT A SHOP DRAWING FORMAT), BE STAMPED AND SIGNED BY THE PROFESSIONAL ENGINEERS WHO PERFORMED THE DESIGNS AND BE SUBMITTED TO THE ENGINEER WHEN REQUESTED FOR EITHER A REVIEW OR RECORD PURPOSES AS SPECIFIED IN THE REQUEST. IN ADDITION, THE PROFESSIONAL ENGINEERS RETAINED BY THE CONTRACTORS TO PERFORM THE DESIGNS REQUIRED BY THE CONTRACT DOCUMENTS SHALL AS A MINIMUM, REVIEW THE SHOP DRAWINGS ASSOCIATED WITH THEIR DESIGNS AND VISIT THE CONSTRUCTION SITE TO OBSERVE THAT THE WORK IS BEING PERFORMED IN ACCORDANCE WITH THEIR DESIGNS. THE COSTS ASSOCIATED WITH THEIR DESIGNS, MATERIALS AND LABORS, SHALL BE BORNE BY THE CONTRACTORS. THE RESPONSIBILITY FOR DESIGNS REQUIRED OF THE CONTRACTORS SHALL REMAIN SOLELY WITH THE CONTRACTORS.

3. STRUCTURAL CONTRACT DOCUMENTS SHALL BE USED AND COORDINATED BY THE CONTRACTORS IN CONJUNCTION WITH THE ARCHITECTURAL, MECHANICAL, ELECTRICAL, PLUMBING, FIRE PROTECTION, EQUIPMENT, KITCHEN AND SITE CONTRACT DOCUMENTS, THE PROJECT SPECIFICATIONS, THE SHOP DRAWINGS AND OTHER SUBMITTALS AND THE SUBSURFACE/GEOTECHNICAL DATA.

4. ALL DIMENSIONS, ELEVATIONS AND CONDITIONS SHALL BE VERIFIED IN THE FIELD BY THE CONTRACTORS AND ANY DISCREPANCIES SHALL BE BROUGHT TO THE ATTENTION OF THE ENGINEER FOR CLARIFICATION BEFORE PROCEEDING WITH THE AFFECTED PART OF THE WORK. FOR WORK ATTACHED TO OR WITHIN EXISTING STRUCTURES, THE CONTRACTORS SHALL DETERMINE ALL NECESSARY DIMENSIONS, ELEVATIONS AND CONDITIONS REQUIRED FOR THE ACCURATE FABRICATION AND ERECTION OF THE BUILDING COMPONENTS. ALL FIELD CONDITIONS SHALL BE VERIFIED IN THE FIELD (V.I.F.) BY THE CONTRACTORS PRIOR TO THE SUBMISSION OF SHOP DRAWINGS. UPON RECEIPT OF SHOP DRAWINGS, THE ENGINEER HAS THE RIGHT TO ASSUME THAT ALL FIELD DIMENSIONS, ELEVATIONS AND CONDITIONS HAVE BEEN VERIFIED BY THE CONTRACTORS AND THAT THE SHOP DRAWINGS ACCURATELY REFLECT SUCH VERIFICATIONS UNLESS STATED OTHERWISE ON THE SHOP DRAWINGS.

5. UNLESS OTHERWISE NOTED, DETAILS, SECTIONS AND NOTES CONTAINED IN THE STRUCTURAL CONTRACT DOCUMENTS SHALL BE CONSIDERED TYPICAL FOR ALL SIMILAR CONDITIONS.

B. SHOP DRAWINGS

1. CHECKED SHOP DRAWINGS, FIRST REVIEWED AND APPROVED BY THE GENERAL CONTRACTOR, SHALL BE SUBMITTED TO THE ENGINEER FOR ENGINEER'S REVIEW AND COMMENT BEFORE FABRICATION, OR DELIVERY OF MATERIAL NOT REQUIRING FABRICATION, CAN PROCEED. SHOP DRAWINGS SUBMITTED TO THE ENGINEER WITHOUT FIRST BEING STAMPED "REVIEWED" BY THE GENERAL CONTRACTOR SHALL BE RETURNED WITHOUT BEING REVIEWED BY THE ENGINEER. REVIEW OF SHOP DRAWINGS BY THE ENGINEER SHALL NOT RELIEVE THE CONTRACTORS FROM CONFORMING TO THE REQUIREMENTS OF THE CONTRACT DOCUMENTS. REFER TO SPECIFICATION SECTIONS FOR ADDITIONAL SUBMITTAL REQUIREMENTS.

2. SHOP DRAWINGS SHALL BE ORIGINAL DRAWINGS PREPARED BY THE CONTRACTORS. REPRODUCTION OF THE STRUCTURAL CONTRACT DOCUMENTS FOR USE AS A SHOP DRAWING IS UNACCEPTABLE AND WILL BE REJECTED FOR NON-COMPLIANCE.

3. PROPOSED CHANGES, SUBSTITUTIONS OR DELETIONS, MADE BY THE CONTRACTORS TO THE STRUCTURAL CONTRACT DOCUMENTS SHALL BE SUBMITTED TO THE ENGINEER FOR REVIEW AND COMMENT PRIOR TO THEIR INCORPORATION INTO THE PROJECT. THE SUBMISSION SHALL HIGHLIGHT AND NOTE THE PROPOSED CHANGE, SUBSTITUTION OR DELETION. PROPOSED CHANGES, SUBSTITUTIONS OR DELETIONS TO THE STRUCTURAL CONTRACT DOCUMENTS WHICH DO NOT FOLLOW THIS REVIEW PROCEDURE SHALL BE CONSIDERED UNACCEPTABLE.

C. CAST-IN-PLACE CONCRETE

1. ALL CONCRETE FOR PIERS, EXTERIOR/PERIMETER FOUNDATION WALLS, EXTERIOR SLABS AND EXTERIOR CONCRETE CONSTRUCTION IN GENERAL, INCLUDING BUT NOT LIMITED TO; PADS, APRONS, CURBS, SIDEWALKS, RAMPS, AND SITE STRUCTURES, SHALL BE AIR-ENTRAINED NORMAL WEIGHT AND ATTAIN A MINIMUM ULTIMATE COMPRESSIVE STRENGTH OF 4,000 PSI AT THE END OF 28 DAYS AS DETERMINED BY ASTM C39.

2. UNLESS OTHERWISE NOTED, ALL CONCRETE FOR FOOTINGS, INTERIOR FOUNDATION WALLS AND INTERIOR SLABS SHALL BE NORMAL WEIGHT AND ATTAIN A MINIMUM ULTIMATE COMPRESSIVE STRENGTH OF 3,000 PSI AT THE END OF 28 DAYS AS DETERMINED BY ASTM C39.

3. REFER TO PROJECT SPECIFICATION SECTION 033000 FOR ADDITIONAL REQUIREMENTS.

D. CONCRETE REINFORCING

1. PROVIDE ADDITIONAL REINFORCING IN THE CONCRETE ELEMENTS AS FOLLOWS:

   A. IN CONCRETE BEAMS WHERE HORIZONTAL REINFORCING BARS ARE NOT OTHERWISE SHOWN FOR ALL OR A PORTION OF THE BEAMS, PROVIDE 1-#5 BAR CONTINUOUS AT EACH CORNER TO SECURE THE STIRRUPS.
   B. IN CONCRETE BEAMS WHERE STIRRUPS ARE NOT SPECIFIED FOR ALL OR A PORTION OF THE BEAMS, PROVIDE #4 BAR CLOSED STIRRUPS AT 12 INCHES MAXIMUM ON-CENTER.
   C. UNLESS OTHERWISE NOTED, IN CONCRETE BEAMS 24 INCHES TO 36 INCHES DEEP INCLUSIVE, PROVIDE 1-#5 BAR CONTINUOUS EACH FACE AT MID-DEPTH. IN CONCRETE BEAMS GREATER THAN 36 INCHES DEEP UP THROUGH 54 INCHES DEEP, PROVIDE 2-#5 BARS CONTINUOUS EACH FACE AT THIRD POINTS OF DEPTH. IN CONCRETE BEAMS GREATER THAN 54 INCHES PROVIDE #5 BARS CONTINUOUS EACH FACE AT 6 INCHES ON-CENTER MAXIMUM.
   D. UNLESS OTHERWISE NOTED, PROVIDE 1-#6 BAR AT ALL FOUR SIDES OF OPENINGS IN CONCRETE SLABS AND RE-ENTRANT CORNERS, EXTENDING 2 FEET BEYOND OPENINGS OR RE-ENTRANT CORNERS OR STANDARD HOOKED IF NECESSARY WHETHER OR NOT THE OPENINGS ARE SHOWN ON THE STRUCTURAL CONTRACT DOCUMENTS.
   F. UNLESS OTHERWISE NOTED, IN CONCRETE WALLS OF ALL TYPES, PROVIDE CONTINUOUS REINFORCING BARS, EACH WAY, AS FOLLOWS:

WALL THICKNESS(t)	NO. OF LAYERS	BAR SIZE	VERTICAL ON-CENTER SPACING	HORIZONTAL ON-CENTER SPACING
< 8"	1	#4	18"	12"
> 8" TO < 16"	2	#4	18"	12"

   PROVIDE STANDARD HOOKED DOWELS TO FOOTINGS OR OTHER CONCRETE CONSTRUCTION TO MATCH THE VERTICAL REINFORCING'S SIZE AND SPACING.

   G. UNLESS OTHERWISE NOTED, IN CONCRETE PIERS AND PILASTERS PROVIDE CONTINUOUS VERTICAL REINFORCING EQUAL TO 1.0 PERCENT OF THE GROSS CROSS-SECTIONAL AREA OF THE COLUMN, PIER, AND PILASTER. ONE VERTICAL BAR SHALL BE LOCATED IN EACH CORNER. TIES SHALL BE PROVIDED IN ACCORDANCE WITH ACI 318, SECTION 7, BUT NOT LESS THAN #3 BARS AT 12 INCHES ON-CENTER. PROVIDE STANDARD HOOKED DOWELS TO FOOTINGS OR OTHER CONCRETE CONSTRUCTION TO MATCH THE VERTICAL REINFORCING'S SIZE AND NUMBER.

E. STRUCTURAL STEEL (IF UTILIZED)

1. ALL STEEL SHALL BE NEW AND UN-SPLICED STEEL CONFORMING TO THE FOLLOWING ASTM DESIGNATIONS:

   A. W-SHAPES; ASTM A992, Fy = 50 KSI.
   B. CHANNELS, ANGLES, PLATES, BARS AND RODS; A36, UNLESS OTHERWISE NOTED.
   C. ANCHOR RODS; F1554, GRADE 55 WITH WELDABILITY SUPPLEMENT S1 AND WITH STANDARD NUTS AND 5/16 INCH THICK PLATE WASHERS, UNLESS OTHERWISE NOTED.
   D. SQUARE AND RECTANGULAR HOLLOW STRUCTURAL SECTIONS; A500 GRADE B, Fy = 46 KSI.
   E. PIPES; A53 GRADE B, TYPE E.
   G. ADHESIVEAND MECHANICAL ANCHORS; AS MANUFACTURED BY "HILTI CORPORATION" OR APPROVED EQUIVALENT.
   I. GALVANIZING; HOT-DIPPED A123 AND A153 AS APPLICABLE.
   J. SHOP PRIMER; TNEMEC SERIES 10-1099 GREY OR APPROVED EQUIVALENT.

2. REFER TO PROJECT SPECIFICATION SECTION 051200 FOR ADDITIONAL REQUIREMENTS.

F. CONVENTIONAL WOOD FRAMING

1. ALL SAWN LUMBER FRAMING MEMBERS SHALL BE SPRUCE-PINE-FIR (NOT SOUTHERN), UNLESS OTHERWISE NOTED. MINIMUM PROPERTIES TO BE IN ACCORDANCE WITH TABLE 4A OF THE LATEST EDITION OF THE "NATIONAL DESIGN SPECIFICATIONS FOR WOOD CONSTRUCTION" SUPPLEMENT, WITH THE FOLLOWING MINIMUM GRADES:

   A. JOISTS, RAFTERS, SOLID AND BUILT-UP BEAMS AND HEADERS; NO. 2 OR BETTER GRADE.
   B. 2x4 WALL STUDS, SILLS AND PLATES; NO. 2 OR BETTER GRADE.
   C. 2x6 WALL STUDS, SILLS AND PLATES; STUD OR BETTER GRADE.
   D. 4x SOLID WOOD POSTS; NO. 2 OR BETTER GRADE.
   E. 6x AND LARGER SOLID WOOD POSTS; NO. 1 OR BETTER GRADE.
   F. BRIDGING, BLOCKING AND NAILERS; STUD OR BETTER GRADE.

2. ALL HORIZONAL "LVL" MEMBERS SHALL HAVE THE FOLLOWING MINIMUM PROPERTIES:

   A. E = 2,000,000 PSI
   B. Fb = 3100 PSI
   C. Ft = 2150 PSI
   D. Fc (perpendicular) = 750 PSI
   E. Fc (parallel) = 3000 PSI
   F. Fv = 285 PSI

3. ALL VERTICAL "LVL" MEMBERS SHALL HAVE THE FOLLOWING MINIMUM PROPERTIES:

   A. E = 1,800,000 PSI
   B. Fb = 2750 PSI
   C. Fc (parallel) = 3000 PSI

4. UNLESS OTHERWISE NOTED, ALL PRESSURE TREATED SAWN LUMBER FRAMING MEMBERS SHALL BE SOUTHERN YELLOW PINE. MINIMUM PROPERTIES TO BE IN ACCORDANCE WITH THE LATEST EDITION OF THE "NATIONAL DESIGN SPECIFICATIONS FOR WOOD CONSTRUCTION" SUPPLEMENT, WITH THE FOLLOWING MINIMUM GRADES:

   A. JOISTS, RAFTERS, SOLID AND BUILT-UP BEAMS AND HEADERS; NO. 2 OR BETTER GRADE.
   B. WALL STUDS, SILLS AND PLATES; STUD GRADE.
   C. SOLID WOOD POSTS; NO. 1 OR BETTER GRADE.
   D. BRIDGING, BLOCKING AND NAILERS; STUD GRADE.

5. UNLESS OTHERWISE NOTED, ALL NAILING AND FASTENING SHALL BE IN ACCORDANCE WITH THE GOVERNING BUILDING CODE.

6. WOOD SILLS SUPPORTED ON CONCRETE BENEATH ALL INTERIOR AND EXTERIOR BEARING WALLS AND ALL MEMBERS EXPOSED TO WEATHER OR MOISTURE SHALL BE PRESERVATIVE TREATED IN ACCORDANCE WITH THE "AMERICAN WOOD PROTECTION ASSOCIATION? STANDARDS.

7. ALL LUMBER AND PLYWOOD NOTED IN THE CONTRACT DOCUMENTS AS FIRE RETARDANT TREATED (F.R.T.) SHALL BE SO TREATED IN ACCORDANCE WITH THE "AMERICAN WOOD PROTECTION ASSOCIATION? STANDARDS AND EACH PIECE SHALL BEAR A U.L. LABEL INDICATING SUCH TREATMENT.

8. ALL NON-PRESSURE TREATED WOOD SHALL BE KILN DRIED TO A MOISTURE CONTENT OF 19 PERCENT OR LESS FOR LUMBER AND 15 PERCENT OR LESS FOR PLYWOOD BEFORE INSTALLATION AND PRIOR TO THE APPLICATION OF ROOFING AND FINISHES.

9. ADDITIONAL FLOOR JOISTS SHALL BE PROVIDED UNDER ALL PARTITIONS OVER 3 FEET LONG WHICH RUN PARALLEL TO THE SPAN OF THE FLOOR JOISTS.

10. ALL STUD WALLS, BEARING AND NON-BEARING, SHALL HAVE ONE ROW OF CONTINUOUS 2X SOLID BLOCKING BETWEEN STUDS AT MID-HEIGHT, UNLESS OTHERWISE NOTED, BLOCKING SIZE TO MATCH STUD SIZE.

11. FRAMING MEMBERS SHALL ONLY BE NOTCHED, CUT OR ALTERED IN THE FIELD IN ACCORDANCE WITH THE STRUCTURAL DETAILS. DEVIATION FROM THESE DETAILS IS ONLY PERMITTED WITH THE SPECIFIC APPROVAL OF THE ENGINEER.

12. WHERE REQUIRED BY THE CONTRACT DOCUMENTS, ALL METAL CONNECTORS FOR WOOD CONSTRUCTION, INCLUDING BUT NOT LIMITED TO; JOIST, BEAM AND SADDLE HANGERS, POST AND COLUMN BASES AND CAPS, BRIDGING, HOLDDOWNS, HINGE CONNECTORS AND STRAPPING, SHALL BE G90 GALVANIZED METAL SHAPES AS MANUFACTURED BY "SIMPSON STRONG-TIE COMPANY, INC." AND ATTACHED BY THE GENERAL CONTRACTOR AS PER THE "SIMPSON STRONG-TIE" SPECIFICATIONS. FOR USE WITH PRESERVATIVE TREATED LUMBER, ALL METAL CONNECTORS SHALL BE SIMPSON Z-MAX COATED (G185 GALVANIZED PER ASTM A653), HOT-DIP GALVANIZED AFTER FABRICATION PER ASTM A123, OR SHALL BE FABRICATED FROM STAINLESS STEEL, AND ALL METAL FASTENERS SHALL BE GALVANIZED PER ASTM A153 OR BE STAINLESS STEEL TO MATCH CONNECTOR.

13. ALL INTERIOR WALL SHEATHING FOR WALLS SPECIFICALLY NOTED ON PLAN AND ALL EXTERIOR WALL SHEATHING SHALL BE 15/32 INCH APA RATED PLYWOOD SHEATHING 24/0 PANELS OR OSB PANELS OF EQUAL OR GREATER STRENGTH AND STIFFNESS. USE EXPOSURE 1 PANELS, EXCEPT USE EXTERIOR GRADE PLYWOOD PANELS WHEN LONG CONSTRUCTION DELAYS ARE ANTICIPATED. PROVIDE SHEATHING ON ONE OR BOTH SIDES OF THE STUDS AS NOTED ON PLAN. APPLY PANELS HORIZONTALLY. PROVIDE HORIZONTAL 2X BLOCKING AT ALL PANEL EDGES, UNLESS OTHERWISE NOTED ON PLANS. ATTACH PANELS WITH 8d COMMON NAILS AT 6 INCHES ON CENTER AT PANEL EDGES AND 12 INCHES ON CENTER AT INTERMEDIATE SUPPORTS, UNLESS OTHERWISE NOTED ON PLANS. LEAVE 1/8 INCH SPACE AT ALL PANEL JOINTS UNLESS OTHERWISE RECOMMENDED BY THE MANUFACTURER.

14. ALL ROOF SHEATHING SHALL BE 19/32 INCH APA RATED PLYWOOD SHEATHING 32/16 PANELS OR OSB PANELS OF EQUAL OR GREATER STRENGTH AND STIFFNESS. USE EXPOSURE 1 PANELS, EXCEPT USE EXTERIOR GRADE PLYWOOD PANELS FOR STARTER STRIPS ALONG EAVES AND WHEN LONG CONSTRUCTION DELAYS ARE ANTICIPATED. APPLY PANELS WITH THE LONG DIMENSION PERPENDICULAR TO THE RAFTERS, JOISTS, OR TRUSSES AND CONTINUOUS OVER TWO OR MORE SPANS. INSTALL PANEL CLIPS ALONG PANEL ENDS BETWEEN EACH RAFTER, JOIST, OR TRUSS. ATTACH PANELS WITH 8d COMMON NAILS AT 6 INCHES ON CENTER AT SUPPORTED PANEL EDGES AND 12 INCHES ON CENTER AT INTERMEDIATE SUPPORTS. LEAVE 1/8 INCH SPACE AT ALL PANEL JOINTS UNLESS OTHERWISE RECOMMENDED BY THE MANUFACTURER.

15. ALL FLOOR SHEATHING SHALL BE 23/32 INCH APA RATED "STURD-I-FLOOR", 24 OC, TONGUE AND GROOVE, PLYWOOD PANELS. USE EXPOSURE 1 PLYWOOD PANELS, EXCEPT USE EXTERIOR GRADE PLYWOOD PANELS OR J.M. HUBER CORPORATION ADVANTECH BRAND PANELS WHEN LONG CONSTRUCTION DELAYS ARE ANTICIPATED. APPLY PANELS WITH THE LONG DIMENSION PERPENDICULAR TO THE JOISTS OR TRUSSES AND CONTINUOUS OVER TWO OR MORE SPANS. ATTACH PLYWOOD PANELS BY GLUE-NAILING AS FOLLOWS:

   A. SPREAD GLUE IN ACCORDANCE WITH RECOMMENDATIONS OF GLUE MANUFACTURER AND INDUSTRY PRACTICE.
   B. STAGGER END JOINTS IN EACH SUCCEEDING ROW, LEAVING 1/8 INCH SPACE BETWEEN ALL END AND EDGE JOINTS, INCLUDING TONGUE AND GROOVE EDGES.
   C. COMPLETE ALL NAILING OF EACH PANEL BEFORE GLUE SETS WITH 8d RING- OR SCREW-SHANK NAILS OR #8 x 2" FLAT-HEAD WOOD SCREWS AT 6 INCHES ON CENTER AT SUPPORTED PANEL EDGES AND 12 INCHES ON CENTER INTERMEDIATE SUPPORTS, UNLESS OTHERWISE NOTED.

16. LEAD HOLES FOR WOOD SCREWS AND LAG BOLTS SHALL BE DRILLED 7/8 OF THE SHANK DIAMETER FOR THE DEPTH OF SHANK EMBEDMENT AND 7/8 OF THE THREADED PORTION DIAMETER FOR THE DEPTH OF THE THREAD EMBEDMENT.

G. PREFABRICATED WOOD WALL PANELS (IF UTILIZED)

1. PREFABRICATED WOOD WALL PANELS SHALL BE CONSTRUCTED IN ACCORDANCE WITH THE CONVENTIONAL WOOD FRAMING REQUIREMENTS.

2. VERTICAL PANEL JOINTS AT CORNERS AND IN THE RUN OF THE WALLS SHALL HAVE THE SHEATHING LAPPED ONTO THE ADJACENT PANEL. AT CORNERS, THE SHEATHING SHALL FULLY LAP THE END OF THE PANEL THAT EXTENDS INTO THE CORNER. AT JOINTS IN THE RUN OF THE WALL, THE SHEATHING SHALL LAP A MINIMUM OF 3/4 INCHES.

3. AT EXTERIOR WALL PANELS, THE SHEATHING SHALL LAP ABOVE AND BELOW THE FLOOR LEVEL AS SHOWN IN THE STRUCTURAL CONTRACT DOCUMENTS.

4. COORDINATE THE LOCATIONS OF THE POSTS ASSOCIATED WITH THE CONVENTIONAL TIEDOWNS SO THAT THEY ALIGN HORIZONTALLY FROM FLOOR TO FLOOR.

5. ALL THE CONTRACT DOCUMENTS, INCLUDING ARCHITECTURAL, STRUCTURAL, MECHANICAL, ELECTRICAL, PLUMBING, FIRE PROTECTION, KITCHEN, AND EQUIPMENT SHALL BE REFERRED TO DETERMINE THE TOTAL NUMBER, SIZE, AND LOCATIONS OF OPENINGS IN THE PREFABRICATED WOOD WALL PANELS, WHETHER SHOWN IN THE STRUCTURAL DRAWINGS OR NOT, AND PROVIDE FRAMING IN ACCORDANCE WITH THE STRUCTURAL CONTRACT DOCUMENTS AT EACH OPENING.

H. WOOD I JOISTS (W.I. JOISTS)

1. ALL W.I. JOISTS SHALL BE AJS OR BCI JOISTS AS MANUFACTURED BY ?BOISE CASCADE" OR APPROVED EQUIVALENT AND INSTALLED BY THE GENERAL CONTRACTOR AS PER THE MANUFACTURER?S SPECIFICATIONS.

2. ALL DESIGNS SHALL BE PREPARED IN ACCORDANCE WITH GENERAL NOTE #2 HEREIN AND BE SUBMITTED TO THE ENGINEER FOR DIMENSIONAL REVIEW AND RECORD PURPOSES ONLY.

3. THE GOVERNING BUILDING CODE AND THE ARCHITECTURAL, STRUCTURAL, MECHANICAL, ELECTRICAL, PLUMBING, AND FIRE PROTECTION CONTRACT DOCUMENTS SHALL BE REFERRED TO FOR DETERMINING DEAD AND LIVE LOAD REQUIREMENTS. ARCHITECTURAL CONTRACT DOCUMENTS SHALL BE REFERRED TO FOR EXTENTS AND LOCATIONS OF OCCUPANCIES. SHOP DRAWINGS AND CALCULATIONS SHALL INDICATE LOADS WHICH MEMBERS HAVE BEEN DESIGNED FOR. DEFLECTION LIMITATIONS ARE AS FOLLOWS:

   A. L/240; TOTAL LOAD.
   B. L/480; FLOOR LIVE LOAD (WITHOUT CONSIDERING THE COMPOSITE ACTION OF THE GLUE/NAILED SHEATHING.)
   C. L/360; ROOF LIVE LOAD.

4. SUBMIT W.I. JOIST DESIGN DOCUMENTS WHICH SHALL INCLUDE W.I. JOIST PROPERTIES AND LOADING AND A DIMENSIONED ERECTION PLAN INDICATING THE LOCATION OF EACH W.I. JOIST, ALL OF WHICH SHALL BEAR THE STAMP AND SIGNATURE OF A PROFESSIONAL STRUCTURAL ENGINEER REGISTERED IN THE STATE IN WHICH THE PROJECT IS LOCATED.

5. THE ARCHITECTURAL, MECHANICAL, PLUMBING, ELECTRICAL, AND FIRE PROTECTION CONTRACT DOCUMENTS SHALL BE REFERRED TO FOR LAYOUT AND CONFIGURATION REQUIREMENTS NOT SHOWN ON THE STRUCTURAL CONTRACT DOCUMENTS.

6. ADDITIONAL W.I. JOISTS SHALL BE PROVIDED UNDER ALL PARTITIONS OVER 3 FEET LONG WHICH RUN PARALLEL TO THE SPAN OF THE W.I. JOISTS.

7. W.I. JOIST FLANGES SHALL NOT BE NOTCHED, CUT, OR ALTERED. HOLES IN W.I. JOISTS WEBS SHALL BE CREATED IN ACCORDANCE WITH THE MANUFACTURER?S REQUIREMENTS.

I. WOOD TRUSSES

1. WOOD TRUSS MEMBERS, BRACING (TEMPORARY AND PERMANENT), AND CONNECTIONS SHALL BE DESIGNED BY THE MANUFACTURER AND FABRICATED AND ERECTED IN ACCORDANCE WITH THE LATEST EDITIONS OF THE FOLLOWING. ALL DESIGNS SHALL BE PREPARED IN ACCORDANCE WITH GENERAL NOTE #2 HEREIN AND BE SUBMITTED TO THE ENGINEER FOR DIMENSIONAL REVIEW AND RECORD PURPOSES ONLY.

   A. NFePA "NATIONAL DESIGN SPECIFICATION FOR WOOD CONSTRUCTION" AND "SUPPLEMENT - DESIGN VALUES FOR WOOD CONSTRUCTION"
   B. AITC "TIMBER CONSTRUCTION MANUAL"
   C. TPI "DESIGN SPECIFICATIONS FOR METAL PLATE CONNECTED WOOD TRUSSES"
   D. WTCA "BRACING WOOD TRUSSES: COMMENTARY AND RECOMMENDATIONS"

2. TRUSS MEMBER, BRACING (TEMPORARY AND PERMANENT), AND CONNECTION DESIGNS SHALL BE MODIFIED BY THE APPLICABLE FACTORS LISTED IN AITC "TIMBER CONSTRUCTION MANUAL", SUCH AS EXPOSURE CONDITION, FIRE RETARDANT TREATMENT, DURATION OF LOAD, ETC.

3. THE GOVERNING BUILDING CODE AND THE ARCHITECTURAL, STRUCTURAL, MECHANICAL, ELECTRICAL, PLUMBING, FIRE PROTECTION, KITCHEN AND EQUIPMENT CONTRACT DOCUMENTS SHALL BE REFERRED TO FOR DETERMINING DEAD AND LIVE LOAD REQUIREMENTS. ARCHITECTURAL CONTRACT DOCUMENTS SHALL BE REFERRED TO FOR EXTENTS AND LOCATIONS OF OCCUPANCIES. SHOP DRAWINGS AND CALCULATIONS SHALL INDICATE LOADS WHICH MEMBERS HAVE BEEN DESIGNED FOR. DEFLECTION LIMITATIONS ARE AS FOLLOWS:

   A. L/240; TOTAL LOAD.
   B. L/480; FLOOR LIVE LOAD (WITHOUT CONSIDERING THE COMPOSITE ACTION OF THE GLUE/NAILED SHEATHING.)
   C. L/360; ROOF LIVE LOAD.

4. SUBMIT SHOP DRAWINGS WHICH SHALL INCLUDE DIMENSIONED INDIVIDUAL TRUSS MEMBER CONFIGURATIONS, MEMBER LOADING AND SIZES WITH ACCOMPANYING WOOD SPECIES AND LUMBER GRADE, TEMPORARY AND PERMANENT BRACING REQUIREMENTS, CONNECTIONS WITH THEIR ASSOCIATED SPECIFICATIONS, AND A DIMENSIONED ERECTION PLAN INDICATING THE LOCATION OF EACH TRUSS, ALL OF WHICH SHALL BEAR THE STAMP AND SIGNATURE OF A PROFESSIONAL STRUCTURAL ENGINEER REGISTERED IN THE STATE IN WHICH THE PROJECT IS LOCATED. WOOD TRUSS SHOP DRAWINGS WILL NOT BE REVIEWED UNTIL THE ENGINEER RECEIVES A CERTIFICATION FROM THE TRUSS MANUFACTURER STATING THAT THEY HAVE "RECEIVED AND REVIEWED A COMPLETE SET OF CONTRACT DRAWINGS AND SPECIFICATIONS".

5. ALL METAL CONNECTORS FOR TRUSSES, INCLUDING BUT NOT LIMITED TO; TRUSS HANGERS, HOLDDOWNS, SEISMIC AND HURRICANE ANCHORS AND STRAPPING, SHALL BE G90 GALVANIZED METAL SHAPES AS MANUFACTURED BY "SIMPSON STRONG-TIE COMPANY, INC." AND BE ATTACHED BY THE GENERAL CONTRACTOR AS PER THE "SIMPSON STRONG-TIE" SPECIFICATIONS. ALL ROOF TRUSSES SHALL BE ATTACHED WITH SEISMIC AND HURRICANE ANCHORS SUITABLE FOR THE DESIGN UPLIFT VALUE.

6. ALL TRUSSES NOTED IN THE CONTRACT DOCUMENTS AS FIRE RETARDANT TREATED (F.R.T.) SHALL BE SO TREATED IN ACCORDANCE WITH THE "AMERICAN WOOD PROTECTION ASSOCIATION? STANDARDS AND EACH PIECE SHALL BEAR A U.L. LABEL INDICATING SUCH TREATMENT. ALL WOOD SHALL BE DRIED TO A MOISTURE CONTENT OF 19 PERCENT OR LESS BEFORE INSTALLATION AND PRIOR TO THE APPLICATION OF ROOFING AND FINISHES.

7. THE ARCHITECTURAL, MECHANICAL, PLUMBING, ELECTRICAL, FIRE PROTECTION AND EQUIPMENT CONTRACT DOCUMENTS SHALL BE REFERRED TO FOR LAYOUT AND CONFIGURATION REQUIREMENTS NOT SHOWN ON THE STRUCTURAL CONTRACT DOCUMENTS. THE TRUSS SUPPLIER SHALL DESIGN AND PROVIDE HEADERS, HANGERS, TRUSSES, AND GIRDER TRUSSES AS REQUIRED TO ACCOMMODATE ALL FLOOR PENETRATIONS.

8. ADDITIONAL FLOOR TRUSSES SHALL BE PROVIDED UNDER ALL PARTITIONS OVER 3 FEET LONG WHICH RUN PARALLEL TO THE SPAN OF THE FLOOR TRUSSES.

9. CENTERLINES OF INDIVIDUAL TRUSS MEMBERS SHALL ALIGN AT JOINTS AND OVER SUPPORTS OR DUE CONSIDERATION SHALL BE TAKEN BY THE TRUSS DESIGNER TO ACCOUNT FOR ANY ECCENTRICITY.

10. WEB CONFIGURATIONS SHOWN IN THE CONTRACT DOCUMENTS ARE NOT MANDATORY, UNLESS SO NOTED, AND MAY BE ALTERED WITH THE APPROVAL OF THE ENGINEER TO SUIT THE MANUFACTURER'S STANDARDS OR TRANSPORTATION REQUIREMENTS.

11. TRUSS MEMBERS SHALL NOT BE NOTCHED, CUT OR ALTERED IN THE FIELD WITHOUT THE SPECIFIC APPROVAL OF THE ENGINEER.

J. SOIL BEARING

1. ALL FOOTINGS SHALL BE CARRIED DOWN TO A NATURAL, COMPETENT, UNDISTURBED, GRANULAR MATERIAL HAVING A PRESUMED MINIMUM SAFE BEARING CAPACITY OF 2 TONS PER SQUARE FOOT OR SHALL BEAR ON COMPACTED STRUCTURAL FILL HAVING A MINIMUM SAFE BEARING CAPACITY OF 2 TONS PER SQUARE FOOT WHICH SHALL BE PREPARED IN THE FOLLOWING MANNER:

   A. REMOVE ALL EXISTING TOP SOIL, FILL, ORGANIC, LOAMY, LOOSE, DISTURBED, AND OTHER UNSUITABLE MATERIAL.
   B. STRUCTURAL FILL SHALL BE PLACED IN LIFTS HAVING A MAXIMUM COMPACTED THICKNESS OF 6 INCH, EACH LIFT COMPACTED TO A MINIMUM OF 95 PERCENT OF ITS MAXIMUM MODIFIED PROCTOR DRY DENSITY AS DETERMINED BY ASTM D1557, METHOD C. FIELD DENSITY SHALL BE MEASURED BY THE NUCLEAR DENSITY METHOD (ASTM D2922). STRUCTURAL FILL SHALL CONFORM WITH THE FOLLOWING SIEVE ANALYSIS:

SIEVE SIZE	TOTAL PERCENT PASSING BY DRY WEIGHT
4"	100
1"	60 - 100
#4	25 - 85
#20	10 - 55
#40	5 - 35
#200	0 - 7

   C. REMOVAL OF DISTURBED AND UNSUITABLE MATERIALS AND PLACING, COMPACTING, AND TESTING OF COMPACTED STRUCTURAL FILL SHALL ONLY BE PERFORMED BY THE GENERAL CONTRACTOR WHILE A PROFESSIONAL GEOTECHNICAL ENGINEER, REGISTERED IN THE STATE IN WHICH THE PROJECT IS LOCATED AND RETAINED BY THE OWNER, IS OBSERVING THE WORK.

2. BOTTOM OF FOOTING ELEVATIONS SHOWN ON THE CONTRACT DOCUMENTS ARE MINIMUM DEPTHS AND ARE NOT TO BE CONSTRUED AS LIMITED IN ANY WAY THE AMOUNT OF EXCAVATION NECESSARY TO REACH A SUFFICIENT BEARING STRATUM. NO FOOTINGS OR SLABS SHALL BE PLACED IN WATER OR ON FROZEN GROUND. IN GENERAL, ALL EXTERIOR CONSTRUCTION SHALL BE CARRIED DOWN A MINIMUM OF 4 FEET BELOW FINISHED, ADJACENT EXTERIOR GRADE.

3. SOIL BASE PREPARATION FOR ALL INTERIOR AND EXTERIOR SLABS-ON-GRADE, INCLUDING BUT NOT LIMITED TO; FLOOR SLABS, SIDEWALKS, PADS AND APRONS, SHALL BE AS REQUIRED HEREIN BY SOIL BEARING NOTE #1, ITEMS A, B AND C HEREIN.

K. DESIGN LOADS

1. THE VARIOUS PORTIONS OF THE STRUCTURE ARE DESIGNED TO CARRY THE FOLLOWING LIVE LOADS IN ACCORDANCE WITH THE GOVERNING BUILDING CODE. LIVE LOAD REDUCTIONS AND STRESS INCREASES FOR DURATION OF LOAD HAVE BEEN TAKEN IN THE DESIGN WHEN APPROPRIATE:

   RISK CATEGORY II

   SNOW: GROUND SNOW LOAD; Pg = 40 PSF
   FLAT ROOF SNOW; Pf = 0.7 Ce Ct I Pg = 35 PSF
   MINIMUM PLUS DRIFTING AND SLIDING SNOW WHERE APPLICABLE.
   SNOW LOAD IMPORTANCE FACTOR; I = 1.0
   EXPOSURE FACTOR; Ce = 1.0
   THERMA

Schedule of Structural Tests and Inspections

The Construction Divisions which require Structural Tests and Inspections for this project are as follows:

1. Earthwork
2. Cast-in-Place Concrete
3. Prestressed Concrete
4. Wood Framing

The owner shall engage independent testing and inspection agencies and others as required for structural tests and inspections during construction. The general contractor shall coordinate such work as follows:

A. Cooperate with the testing agency, structural tests and inspections administrator, building official, owner, and the design team members, and provide safe access to the work areas.

B. Provide incidental labor, equipment, materials and facilities to obtain, handle, store and cure samples at the site or at the source of products to be sampled, tested, and inspected.

C. Notify the appropriate inspection agency at least 24 hours prior to expected times of operations that require sampling, testing, and inspections.

Testing, inspection and sampling in the shop or field shall not relieve the general contractor or sub-contractors of their responsibilities to furnish materials and workmanship that comply with the requirements of the contract documents and shop drawings.

D. Structural tests and inspections does not apply to the designs of the general contractor. The general contractor and his/her design members are responsible for the designs they perform. Designs, analyses, and field observations (sampling, testing and inspections) of the general contractor's equipment, means, methods, sequences, techniques, procedures, and safety precautions and programs incident thereto shall remain strictly the responsibility of the general contractor.

E. The scope of the structural tests and inspections is defined by the governing building code, the contract documents, and the structural engineer-of-record.

F. Refer to Project Specifications for additional information.

Inspection Agency	Firm/Address	Phone/Facsimile
1. Structural Tests and Inspections Administrator	DM Berg Consultants, P.C. 100 Crescent Road, Suite 1A Needham, MA 02494 Attn: William H. Barry, P.E.	(781) 444-5156: telephone (781) 444-5157: facsimile
2. Testing Agency	Attn:	: telephone : facsimile
3. Geotechnical Engineer of Record	Attn:	: telephone : facsimile
4. Contractor's Registered Design Professional (RDP)	Attn:	: telephone : facsimile

Construction Division - Earthwork

Item	Inspection Agency No.	Scope
1. Soil Bearing Strata for Footings and Slabs-On-Grade	3	Once site and foundation excavations are proposed to be complete (in whole or in part), observe and inspect portions of the soil strata beneath all types of interior and exterior slabs-on-grade and continuous wall and individual column footings. Determine whether at these elevations, the soil strata for the slabs-on-grade and footings is adequate to support the contact pressures noted in the Contract Documents, or if additional excavation is required.
2. Controlled Structural Fill for Footings and Slabs-On-Grade	2, 3	A representative shall be on the Project and observing at all times while fill is being placed and compacted. The representative shall make an accurate record of the types of materials used, including grain-size curves, thicknesses of lifts, densities, percent compaction, type of compacting equipment and number of coverages, the use of water and other pertinent data. Perform a sieve analysis (ASTM C136) for each type of fill (on-site and borrow) prior to the placement of the fill. Repeat the sieve analyses when the source or appearance of the fill materials change. Perform Modified Proctor Test, Method C (ASTM D1557) for each type of fill (on-site and borrow). Observe and inspect the storage, placement and compaction of fill materials and perform field density tests on the fill materials by Nuclear Density Method (ASTM D6938) at a frequency determined by Agent No. 3. Verify that un-tested or non-conforming fills (on- site and borrow) are not used in the Project. Substitutions include changing the source or nature of on-site and borrow material.
3. Perforated Drainage Systems	2, 3	Observe and inspect portions of the crushed stone drainage fill, geotextile fabric wrap, perforated drains, and clean-outs for compliance with the Contract Documents. Perforated drainage systems include those behind foundation and retaining walls and under slabs.
4. Waterproofing and Dampproofing	2, 3	Observe and inspect portions of the waterproofing, flashing, and dampproofing operations for conformance with the Contract Documents.
5. Submittals	2, 3	Confirm that approved submittals are on site for fill materials, geotextile fabric, perforated drains, waterproofing, and other submittals required by the Contract Documents. Review submittals, compaction test results, and sieve analyses for fill materials to be placed within building footprint for compliance with the Contract Documents.

Construction Division - Cast-in-Place Concrete

Item	Inspection Agency No.	Scope
1. Mix Proportions and Mixing Technique	1	Review mix proportions for compliance with ACI 318 Chapters 4 and 5 and the Contract Documents. Review mixing technique for compliance with ACI 318 Chapter 5 and the Contract Documents.
2. Material Certifications	1	Review material certifications and product data for compliance with ACI 318 Chapter 3 and the Contract Documents.
3. Reinforcement Installation	1, 2	Observe and inspect portions of the reinforcing bar size, spacing, location, cover, splicing, ties, supports, cleanliness, and details for conformance with ACI 318 Chapter 7 and the Contract Documents.
4. Formwork	1, 2	Observe and inspect portions of the formwork placement, geometric shapes, cleanliness, dryness, tightness, clear cover of reinforcement, removal and reshoring for conformance with ACI 318 Chapter 6 and the Contract Documents.
5. Concrete Placement	1, 2	Observe and inspect portions of the operations of concrete placement for conformance with ACI-318 Chapter 5 and the Contract Documents.
6. Evaluation of Concrete Strength and Sampling of Concrete	2	Sample and test concrete specimens in accordance with ACI 318 Chapter 5 for conformance with the Contract Documents as follows: Perform field tests during placement as follows: All sampling of concrete shall take place after the addition of water, if any, at the site. Record the amount of water added. Record time elapsed from addition of water to cementitious materials at plant to depositing concrete in forms. Notify the General Contractor's Superintendent and the Special Inspector immediately when the maximum allowed mix time limits will be exceeded. All sampling of concrete shall be performed at the point of discharge (i.e., end of chute for non-pumped and end of hose for pumped concrete). Slump: One test (ASTM C143) for each set of compression test specimens made. Air Content: One test (ASTM C231) for each set of compression test specimens made. Concrete Temperature: Test hourly when air temperature is 40 degrees F and below and when 80 degrees F and above and for each set of compression test specimens made. Record ambient air temperature at time of depositing concrete in the forms. Samples for strength tests of each class of concrete placed each day shall be taken not less than once a day, nor less than once for each 150 cubic yards of concrete, nor less than once for each 5000 square feet of surface area for slabs or walls. If total volume of concrete is such that frequency of testing required by above would provide less than five strength tests for a given class of concrete, tests shall be made from at least five randomly selected batches or from each batch if fewer than five batches are used. A strength test shall be the average of the strengths of two cylinders made from the same sample of concrete and tested at 28 days or at test age designated for determination of f'c. Samples for strength tests shall be taken in accordance with "Method of Sampling Freshly Mixed Concrete" (ASTM C172). Five cylinders for each strength test shall be molded and laboratory-cured in accordance with "Practice for Making and Curing Concrete Test Specimens in the Field" (ASTM C 31) and tested in accordance with "Test Method for Compressive Strength of Cylindrical Concrete Specimens" (ASTM C 39). Test one specimen at 7 days, test two specimens at 28 days for determining f'c, and two specimens shall be retained in reserve for later testing to determine f'c if the 28 day tests are unsatisfactory.
7. Curing and Protection	1, 2	Observe and inspect portions of the curing and hot and cold weather procedures for compliance with ACI 318 Chapter 5 and the Contract Documents.
8. Submittals	1, 2 & (4 When Applicable)	Confirm that approved submittals are on site for the mix designs, formwork, reinforcing, curing, hot and cold weather procedures, and other submittals required by the Contract Documents.

Construction Division - Wood Framing

Item	Inspection Agency No.	Scope
1. Plant's Quality Control Procedures (Omit this inspection if the plant submits their current TPI and WTC Certifications and Quality Control Programs).	2	Visit the plant at the start of the work and review the plant's quality control program for monitoring wood species and grade, fabrication, handling, storage and delivery. Observe and inspect portions of the fabricated elements for conformance with TPI, WTC and the Contract Document requirements.
2. Installation	1, 2	Observe and inspect portions of the wood framing components and connections for conformance with the Contract Documents. Components and connections to be observed and inspected include, but are not limited to: joists, rafters, wall studs, trusses, plates, lintels, built-up members, holdowns and sheathing. Observe and inspect, as a minimum: workmanship, sizes, spacings, species and grade of lumber and sheathing, preservation and retardant treatments, screwing, nailing, and gluing.
3. Submittals	1, 2	Confirm that approved submittals are on site for the wood framing, connections, erection plans, and other submittals required by the Contract Documents.

Date issued:

07-15-19

WINSLOW ARCHITECTS INC

89 MASSACHUSETTS AVE.
ARLINGTON, MA 02474

P: 781 648.6600
F: 781 648.6601

www.winslowarchitects.com

Owner/Developer:

-

52 Chauncy Street
Boston, MA 02111

Structural Engineer:

DM BERG CONSULTANTS, P.C.
SERVING THE INDUSTRY SINCE 1960
100 Crescent Road, Suite 1A
Needham, Massachusetts 02494-1457
P 781.444.5156 F 781.444.5157
bwbarry@dmberg.com

DMBC Project # 19057

Project:

MEDFIELD GREEN

Drawing:

STRUCTURAL TESTS AND INSPECTIONS

Revisions:

No.	Description	Date
	FOUNDATIONS	7/15/19

Stamp:

COMMONWEALTH OF MASSACHUSETTS
WILLIAM H. BARRY
STRUCTURAL
No. 40985
REGISTERED
PROFESSIONAL ENGINEER

ANY REPRODUCTION, POSSESSION OR USE OF THIS DRAWING WITHOUT THE WRITTEN PERMISSION OF WINSLOW ARCHITECTS INC. IS PROHIBITED. VIOLATORS WILL BE PROSECUTED TO THE FULL EXTENT OF THE LAW.

© 2019 WINSLOW ARCHITECTS, INC.

Project number:

16-515

Sheet:

S-102

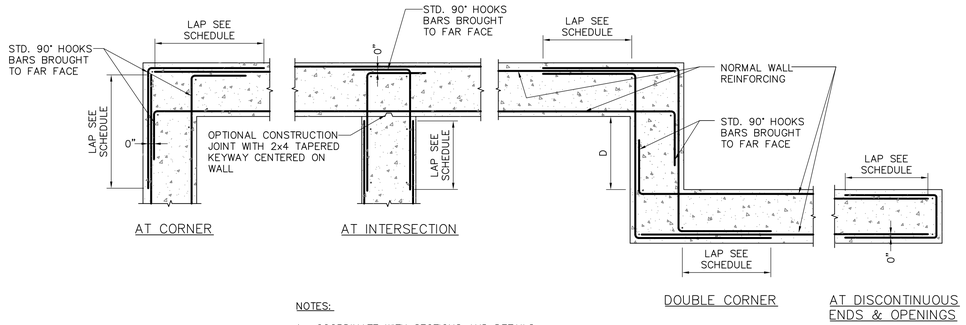

NOTES:

1. COORDINATE WITH SECTIONS AND DETAILS.
2. SIZE AND SPACING OF BARS TO MATCH HORIZONTAL WALL REINFORCING
3. DOUBLE CORNER DETAIL TO BE USED ONLY WHEN DIMENSION D IS NOT SUFFICIENT TO DEVELOP REQUIRED LAP LENGTHS. OTHERWISE, "AT CORNER" CONDITION APPLIES.

CONCRETE REINFORCING DETAILS

1 S-201

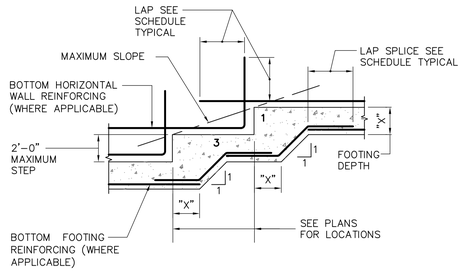

NOTE:

1. REFER TO PLANS, SECTIONS, AND OTHER DETAILS FOR WALL REINFORCING, DOWELS, ADDITIONAL FOOTING REINFORCING AND OTHER INFORMATION AND REQUIREMENTS.

STEPPED FOOTING DETAIL

2 S-201

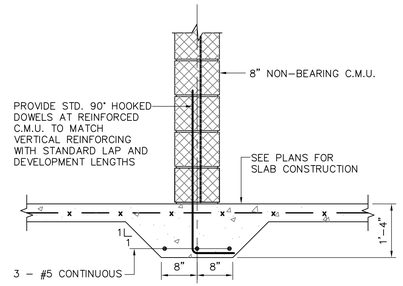

NOTE:

1. THIS DETAIL IS REQUIRED AT ALL 8" NON-BEARING CMU WALLS THAT ARE NOT SPECIFIED TO HAVE CONVENTIONAL FOOTINGS WHETHER THE WALLS ARE SHOWN ON THE STRUCTURAL CONTRACT DRAWINGS OR NOT. REFER TO THE ARCHITECTURAL DRAWINGS FOR WALL DIMENSIONS AND LOCATIONS.

THICKENED SLAB-ON-GRADE DETAIL

3 S-201

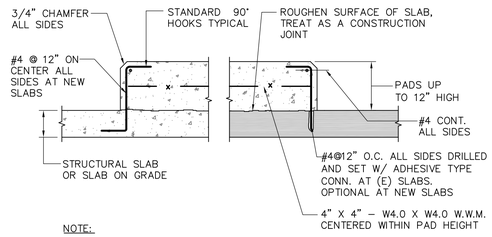

NOTE:

1. THE EXACT SIZE, NUMBER, HEIGHT, SHAPE AND LOCATIONS OF EQUIPMENT (HOUSEKEEPING) PADS SHALL BE DETERMINED BY THE GENERAL CONTRACTOR AFTER APPROVAL OF SHOP DRAWINGS FOR EQUIPMENT. ANCHOR BOLTS WHERE REQUIRED SHALL BE SIZED AND LOCATED ACCORDING TO THE EQUIPMENT MANUFACTURER'S REQUIREMENTS.

CONCRETE EQUIPMENT PAD AND WIDE CURB DETAIL

4 S-201

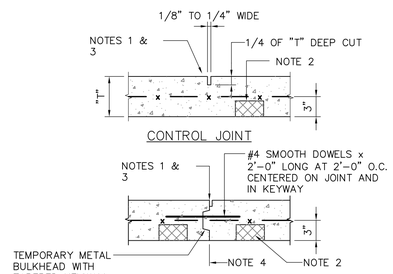

NOTES:

1. ALL SAW CUTTING SHALL TAKE PLACE WITHIN 8 HOURS AFTER THE CONCRETE IS CAST, BUT NOT BEFORE CONCRETE HAS CURED SUFFICIENTLY TO PREVENT RAVELING.
2. PROVIDE DENSE CONCRETE BRICKS FOR W.W.M. SUPPORT AT 3'-6" O.C. EACH DIRECTION THROUGHOUT ALL THE SLAB-ON-GRADE AREAS.
3. REFER TO ARCHITECTURAL DRAWINGS FOR JOINT SEALANTS.
4. CONSTRUCTION JOINTS SHALL ALIGN WITH DEFINED SLAB CONTROL JOINT LOCATIONS.

SLAB-ON-GRADE JOINT DETAILS

5 S-201

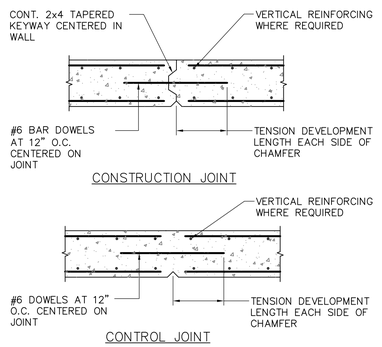

NOTES:

1. STOP HORIZONTAL WALL REINFORCING AT JOINT.
2. PROVIDE FULL HEIGHT 3/4" CHAMFER AT EXTERIOR FACE.
3. PROVIDE JOINTS 5 FEET MAXIMUM OFF ALL CORNERS AND AT 60 FEET MAXIMUM INTERMITTENT. ALIGN JOINTS WITH BRICK MASONRY WALL CONTROL JOINTS WHERE APPLICABLE.

FOUNDATION WALL JOINT DETAILS

6 S-201

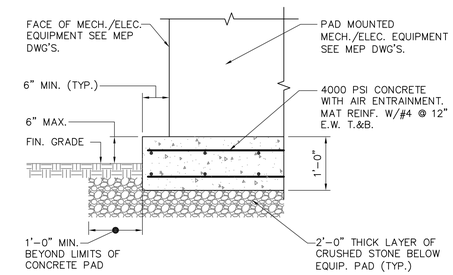

CONCRETE EQUIPMENT PAD ON GRADE

7 S-201

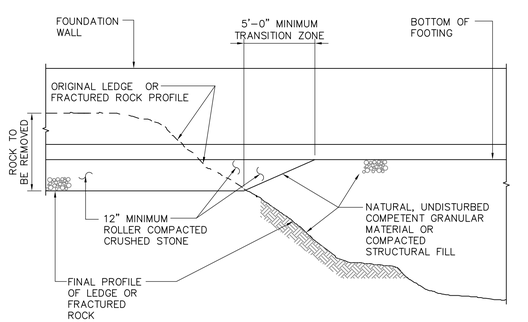

NOTES:

1. REFER TO THE GEOTECHNICAL REPORT AND THE EARTHWORK SPECIFICATION FOR ADDITIONAL REQUIREMENTS.
2. REFER TO "FOOTING/SLAB ON COMPACTED FILL DETAIL" AND "FOOTING/SLAB OVER ROCK DETAIL" FOR ADDITIONAL INFORMATION AND REQUIREMENTS.
3. DETAIL IS SIMILAR AT SLABS-ON-GRADE.

TRANSITION ZONE AT FOOTING OVER ROCK/SOIL DETAIL

8 S-201

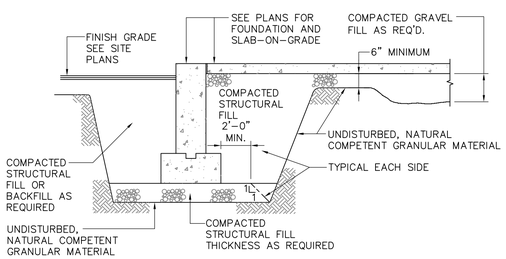

NOTES:

1. REFER TO THE GEOTECHNICAL REPORT AND THE EARTHWORK SPECIFICATION FOR ADDITIONAL REQUIREMENTS.
2. DETAIL IS SIMILAR AT INDIVIDUAL COLUMN FOOTINGS.
3. WHEN GROUNDWATER (OR SURFACE WATER) INTRUDES INTO THE EXCAVATION, REPLACE THE COMPACTED STRUCTURAL FILL UNDER THE FOOTINGS AND SLABS WITH ROLLER COMPACTED CRUSHED STONE.

FOOTING/SLAB ON COMPACTED FILL DETAIL

9 S-201

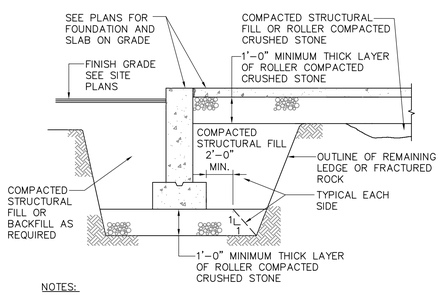

NOTES:

1. REFER TO THE GEOTECHNICAL REPORT AND THE EARTHWORK SPECIFICATION FOR ADDITIONAL REQUIREMENTS.
2. DETAIL IS SIMILAR AT INDIVIDUAL COLUMN FOOTINGS.
3. DETAIL IS SIMILAR AT FOOTINGS/SLAB ON COMPACTED FILL WHEN GROUNDWATER (OR SURFACE WATER) INTRUDES INTO THE EXCAVATION.

FOOTING/SLAB OVER ROCK DETAIL

10 S-201

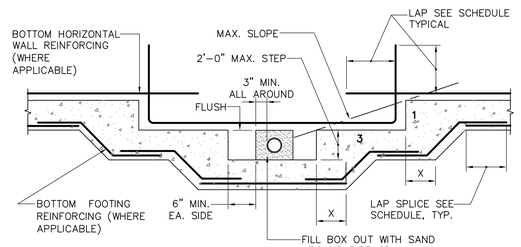

NOTES:

1. FOOTINGS SHALL BE STEPPED DOWN AS SHOWN AT ALL PIPES AND CONDUITS THAT WOULD PASS THROUGH OR UNDER THE FOOTINGS WHETHER THE PIPES, CONDUITS OR STEPS ARE SHOWN IN THE STRUCTURAL CONTRACT PLANS OR NOT. REFER TO ALL THE DRAWINGS IN THE SET FOR SIZES AND LOCATIONS OF ALL PIPES AND CONDUITS.
2. IF THE COVER BETWEEN THE BOTTOM OF FOOTING AND THE TOP OF THE PIPE OR CONDUIT IS GREATER THAN 4'-0", THEN THE FOOTING NEED NOT STEP DOWN AS SHOWN.
3. REFER TO PLANS, SECTIONS, AND OTHER DETAILS FOR WALL REINFORCING, DOWELS, ADDITIONAL FOOTING REINFORCING AND OTHER INFORMATION AND REQUIREMENTS.

FOUNDATION WALL PIPE AND CONDUIT PENETRATION DETAIL

11 S-201

Date issued:

07-15-19

WINSLOW ARCHITECTS INC

89 MASSACHUSETTS AVE.
ARLINGTON, MA 02474

P: 781 648.6600
F: 781 648.6601

www.winslowarchitects.com

Owner/Developer:

-

52 Chauncy Street
Boston, MA 02111

Structural Engineer:

DM BERG CONSULTANTS, P.C.
STRUCTURAL ENGINEERS
SERVING THE INDUSTRY SINCE 1960
100 CRESCENT ROAD, SUITE 1A
NEEDHAM, MASSACHUSETTS 02494-1457
P 781.444.5150 F 781.444.5157
E dmberg@dmberg.com

DMBC Project # 19057

Project:

MEDFIELD GREEN

Drawing:

TYPICAL DETAILS

Revisions:

No.	Description	Date
	FOUNDATIONS	7/15/19

Stamp:

WILLIAM H. BARRY STRUCTURAL No. 40985 REGISTERED PROFESSIONAL ENGINEER COMMONWEALTH OF MASSACHUSETTS

ANY REPRODUCTION, POSSESSION OR USE OF THIS DRAWING WITHOUT THE WRITTEN PERMISSION OF WINSLOW ARCHITECTS INC. IS PROHIBITED. VIOLATORS WILL BE PROSECUTED TO THE FULL EXTENT OF THE LAW.

© 2019 WINSLOW ARCHITECTS, INC.

Project number:

16-515

Sheet:

S-201

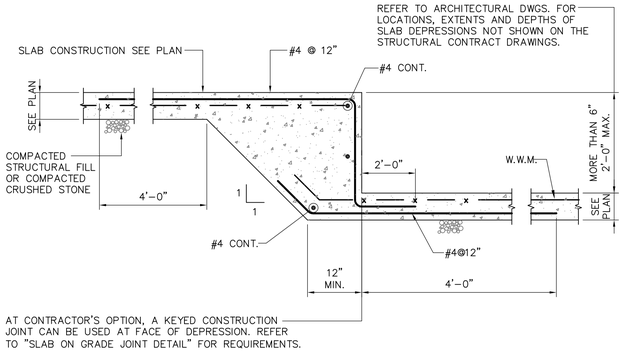

SLAB ON GRADE

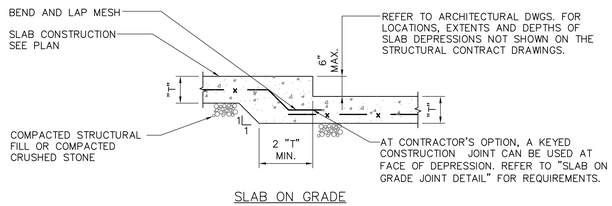

SLAB ON GRADE

SLAB DEPRESSION DETAILS

1
S-202

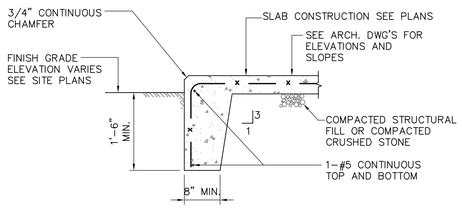

EDGE OF EXTERIOR SIDEWALK APRON AND PAD DETAIL

4
S-202

BAR SIZE	TENSION DEVELOPMENT LENGTH, (ldh), inches
	f'c=3 KSI	f'c=4 KSI
#3	9"	8"
#4	11"	10"
#5	14"	12"
#6	17"	15"
#7	20"	17"
#8	22"	19"
#9	25"	22"
#10	28"	24"
#11	31"	27"

SEE NOTES BELOW FOR EPOXY-COATING FACTOR

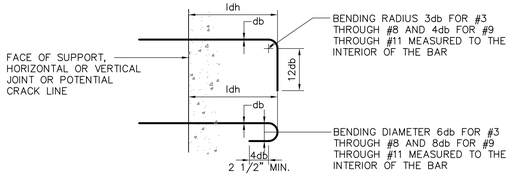

NOTES:

1. TABULATED DEVELOPMENT LENGTHS ARE BASED ON REINFORCING YIELD STRENGTH FY = 60 KSI AND NORMAL WEIGHT CONCRETE.
2. ALL TABULATED VALUES ARE MINIMUM LENGTHS. IN CASE OF CONFLICT WITH THE PLANS, SECTIONS OR DETAILS, USE THE LONGER LENGTH.
3. ADJUST TABULATED LENGTHS BY THE FOLLOWING FACTORS WHERE APPLICABLE. NOTE THAT THE FACTORS ARE CUMULATIVE:

   A. EPOXY-COATED REINFORCEMENT: 1.20

HOOKED REINFORCEMENT TENSION DEVELOPMENT LENGTH SCHEDULE

5
S-202

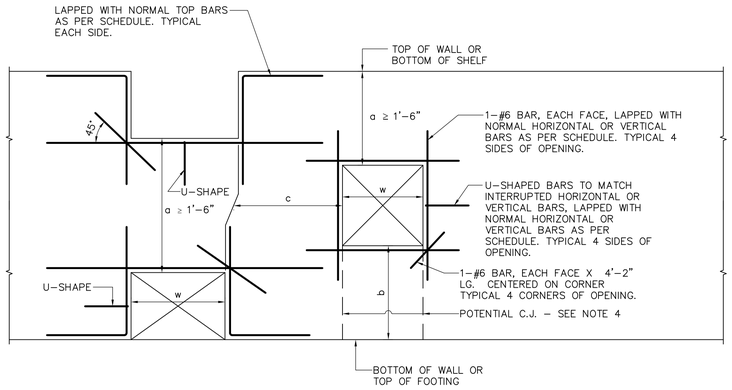

NOTES:

1. NORMAL HORIZONTAL AND VERTICAL REINFORCING NOT SHOWN FOR CLARITY.
2. OPENINGS ARE SHOWN SQUARE AND RECTANGULAR. CIRCULAR OPENINGS REQUIRE THE SAME DETAILS AND REINFORCING.
3. WHEN DIMENSION "a" ≤ 0.5w, REPLACE U-SHAPED BARS WITH CLOSED STIRRUPS. SPACE CLOSED STIRRUPS TO MATCH VERTICAL WALL REINFORCING BUT NOT GREATER THAN a/2.
4. WHERE DIMENSION "b" IS SMALL AND PLACING/FINISHING OF CONCRETE BELOW OPENING IS DIFFICULT, THE GENERAL CONTRACTOR MAY ELECT TO ADD VERTICAL CONSTRUCTION JOINTS ALIGNING WITH THE EDGES OF THE OPENINGS PROVIDED THAT ALL REINFORCING IS CONTINUOUS THROUGH THE JOINTS AND A 1-1/2 INCH BY 3-1/2 INCH TAPERED KEYWAY IS FORMED IN THE JOINTS.
5. WHEN DIMENSION "c" IS LESS THAN 6'-0", THE ENGINEER MAY REQUIRE SPECIAL REINFORCING AROUND THE OPENINGS. SUBMIT THESE OPENINGS TO THE ENGINEER FOR REVIEW.
6. REFER TO ALL THE CONTRACT DRAWINGS TO DETERMINE THE SIZES AND LOCATIONS OF ALL OPENINGS REQUIRED THROUGH CONCRETE WALLS.

OPENING THROUGH CONCRETE WALL DETAIL

2
S-202

CONCRETE COVER REQUIREMENTS	
TYPE / CONDITION	CAST-IN-PLACE CONCRETE
CONCRETE CAST AGAINST AND PERMANENTLY EXPOSED TO EARTH	3"
CONCRETE EXPOSED TO EARTH OR WEATHER	2"
CONCRETE NOT EXPOSED TO WEATHER OR IN CONTACT WITH EARTH	
SLABS, WALLS, JOISTS:	3/4"
BEAMS, COLUMNS, PIERS, PILASTERS:	1 1/2"

NOTES:

1. REINFORCMENT SHALL BE ACCURATELY PLACED AND ADEQUATELY SUPPORTED BEFORE CONCRETE IS CAST, AND SHALL BE SECURED AGAINST DISPLACEMENT WITHIN TOLERANCES AS FOLLOWS:

   d ≤ 8 INCHES: TOLERANCE ON d = ± 3/8 INCH TOLERANCE ON COVER = -3/8 INCH

   d > 8 INCHES; TOLERANCE ON d = ± 1/2 INCH: TOLERANCE ON COVER = -1/2 INCH

   FOR ALL "d"'s: TOLERANCE ON COVER SHALL NOT EXCEED MINUS 1/3 THE TABULATED COVER REQUIREMENTS AND THE TOLERANCE FOR THE CLEAR DISTANCE TO FORMED SOFFITS SHALL BE MINUS 1/4 INCH.

   TOLERANCE FOR LONGITUDINAL LOCATION AT BENDS AND ENDS OF REINFORCEMENT SHALL BE ± 2 INCHES EXCEPT AT DISCONTINUOUS ENDS OF MEMBERS WHERE THE TOLERANCES SHALL BE ± 1/2 INCH.

   WHERE d = THE DISTANCE FROM THE EXTREME COMPRESSION FIBER TO THE CENTER OF TENSION REINFORCEMENT IN INCHES.

2. THE COVER, TOLERANCE AND BAR AND MESH SUPPORT REQUIREMENTS SHALL BE SHOWN ON THE REINFORCING SHOP DRAWINGS.

3
S-202

BAR SIZE	DEVELOPMENT LENGTH, (ld), inches						LAP SPLICE LENGTH, inches				
	TENSION DEVELOPMENT LENGTH				COMPRESSION DEV. LENGTH		TENSION LAP LENGTH				COMPRESSION LAP LENGTH
	TOP BARS		OTHER BARS		ALL BARS		TOP BARS		OTHER BARS		ALL BARS
	3000	4000	3000	4000	3000	4000	3000	4000	3000	4000	f'c ≥ 3000
#3	21"	18"	16"	14"	8"	8"	28"	24"	21"	18"	12"
#4	28"	25"	22"	19"	11"	10"	37"	32"	28"	25"	15"
#5	36"	31"	27"	24"	14"	12"	46"	40"	36"	31"	19"
#6	43"	37"	33"	28"	16"	14"	56"	48"	43"	37"	23"
#7	62"	54"	48"	42"	19"	17"	81"	70"	62"	54"	26"
#8	71"	62"	55"	47"	22"	19"	93"	80"	71"	62"	30"
#9	80"	69"	62"	53"	25"	21"	104"	90"	80"	69"	34"
#10	88"	77"	68"	59"	27"	24"	116"	100"	89"	77"	38"
#11	98"	85"	75"	65"	30"	26"	127"	110"	98"	85"	42"

SEE NOTES BELOW FOR EPOXY-COATING, COVER, AND SPACING FACTORS.

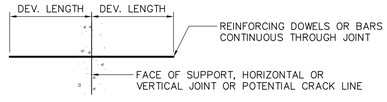

DEVELOPMENT

REFER TO "HOOKED REINFORCEMENT TENSION DEVELOPMENT LENGTH SCHEDULE" WHEN THE STRAIGHT DEV. LENGTH IN TENSION CANNOT BE ACCOMMODATED IN THE CONCRETE SECTION.

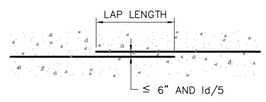

LAP SPLICE

LAP SPLICES IN ADJACENT BARS SHALL BE STAGGERED A MINIMUM OF 24 INCHES. WELDED OR MECHANICAL SPLICES IN ADJACENT BARS SHALL BE STAGGERED A MINIMUM OF 30 INCHES.

NOTES:

1. ALWAYS USE TENSION DEVELOPMENT LENGTH AND TENSION LAP SPLICE LENGTH VALUES, EXCEPT WHEN THE PLANS OR DETAILS NOTE SPECIFICALLY COMPRESSION LENGTHS.
2. TABULATED DEVELOPMENT AND LAP SPLICE LENGTHS ARE BASED ON REINFORCING YIELD STRENGTH FY = 60 KSI, NORMAL WEIGHT CONCRETE AND CLASS B LAPS.
3. TOP BARS ARE DEFINED AS HORIZONTAL BARS WITH MORE THAN 12 INCHES OF FRESH CONCRETE CAST IN THE MEMBER BELOW THE DEVELOPMENT LENGTH OR SPLICE.
4. WHEN DIFFERENT BAR DIAMETERS ARE SPLICED, USE LARGER BAR LAP SPLICE LENGTH.
5. ALL TABULATED VALUES ARE MINIMUM LENGTHS. IN CASE OF CONFLICT WITH THE PLANS, SECTIONS OR DETAILS, USE THE LONGER LENGTH.
6. THE EPOXY-COATED BAR FACTOR FOR TENSION DEVELOPMENT AND TENSION LAP SPLICE LENGTHS IS 1.2. THIS FACTOR INCREASES TO 1.5 WHEN THE COVER OF THE BARS IS LESS THAN 3db OR THE CLEAR SPACING IS LESS THAN 6db. TABULATED VALUES FOR DEVELOPMENT AND LAP LENGTHS IN TENSION SHALL BE FACTORED BY 1.5 WHEN THE CLEAR COVER IS LESS THAN db AND THE CLEAR SPACING IS LESS THAN db (AND THERE ARE STIRRUPS OR TIES ALONG ld) OR IS LESS THAN 2db (AND THERE ARE NO STIRRUPS OR TIES ALONG ld).
7. WELDED AND/OR MECHANICAL SPLICES MAY BE USED AT THE GENERAL CONTRACTORS OPTION PROVIDED THAT THE SPLICE IS CAPABLE OF DEVELOPING AT LEAST 125 PERCENT OF THE YIELD STRENGTH OF THE LARGER BAR IN TENSION. THE GENERAL CONTRACTOR SHALL USE WELDED AND/OR MECHANICAL SPLICES WHERE LAP SPLICES WOULD CREATE BAR CONGESTION THAT WOULD INTERFERE WITH THE PLACING AND FINISHING OF THE CONCRETE. SPLICES IN "TENSION-TIE" MEMBERS SHALL BE FULL WELDED OR FULL MECHANICAL SPLICES. WHERE WELDED AND/OR MECHANICAL SPLICES ARE TO BE USED, THE GENERAL CONTRACTOR SHALL SUBMIT FULL DATA ON THE PROPOSED MATERIALS, PROCEDURES AND INSTALLATION INSTRUCTIONS TO THE ENGINEER FOR REVIEW AS A SHOP DRAWING SUBMISSION.
8. ALL STRAIGHT BAR DEVELOPMENTS AND SPLICES SHALL BE IN ACCORDANCE WITH THE LATEST EDITION OF ACI 318. ALL WELDED SPLICES SHALL BE IN ACCORDANCE WITH THE LATEST EDITION OF AWS D1.4.
9. db = BAR DIAMETER

STRAIGHT REINFORCEMENT DEVELOPMENT AND SPLICE LENGTH SCHEDULE

6
S-202

Date issued:

07-15-19

WINSLOW ARCHITECTS INC

89 MASSACHUSETTS AVE.
ARLINGTON, MA 02474

P: 781 648.6600
F: 781 648.6601

www.winslowarchitects.com

Owner/Developer:

-

52 Chauncy Street
Boston, MA 02111

Structural Engineer:

DMBC STRUCTURAL ENGINEERS
DM BERG CONSULTANTS, P.C.
SERVING THE INDUSTRY SINCE 1960
100 Crescent Road, Suite 1A
Needham, Massachusetts 02494-1457
P 781.444.8150 F 781.444.8157
E dmberg@dmberg.com

DMBC Project # 19057

Project:

MEDFIELD GREEN

Drawing:

TYPICAL DETAILS

Revisions:

No.	Description	Date
	FOUNDATIONS	7/15/19

Stamp:

COMMONWEALTH OF MASSACHUSETTS
WILLIAM H. BARRY
STRUCTURAL
No. 40985
REGISTERED PROFESSIONAL ENGINEER

William H. Barry

ANY REPRODUCTION, POSSESSION OR USE OF THIS DRAWING WITHOUT THE WRITTEN PERMISSION OF WINSLOW ARCHITECTS INC. IS PROHIBITED. VIOLATORS WILL BE PROSECUTED TO THE FULL EXTENT OF THE LAW.

© 2019 WINSLOW ARCHITECTS, INC.

Project number:

16-515

Sheet:

S-202

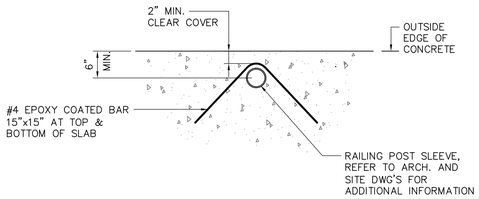

HAIRPIN REINFORCING AT EDGE

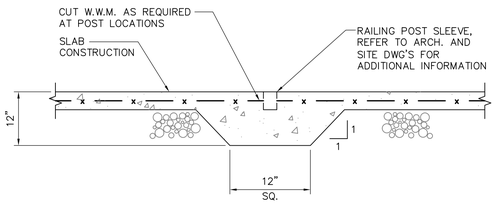

DETAIL AT THICKENED SLAB-ON-GRADE

RAILING POST DETAILS

1
S-203

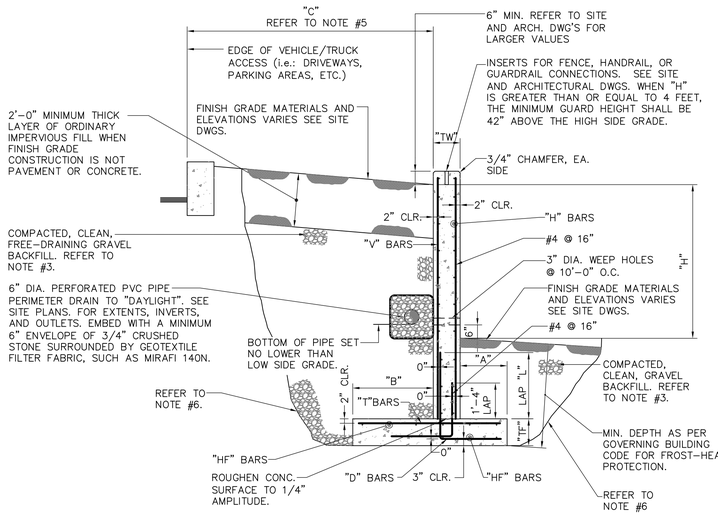

SITE RETAINING WALL DETAIL

SITE RETAINING WALL DIMENSIONS & REINFORCING SCHEDULE

"H"	"A"	"B"	"TW"	"TF"	"H BARS"	"HF BARS"	"V BARS"	"D BARS"	"T BARS"	LAP "L"
0' TO 4'	1'-0"	2'-0"	1'-0"	1'-0"	#4 @ 16"	#5 @ 14"	#4 @ 12"	#4 @ 12"	#4 @ 12"	2'-0"
4' TO 6'	1'-6"	2'-9"	1'-0"	1'-0"	#4 @ 16"	#5 @ 14"	#4 @ 12"	#5 @ 12"	#5 @ 12"	3'-0"
6' TO 8'	2'-0"	3'-6"	1'-0"	1'-0"	#4 @ 16"	#5 @ 14"	#5 @ 12"	#5 @ 6"	#5 @ 8"	4'-0"
8' TO 10'	2'-5"	4'-5"	1'-0"	1'-2"	#4 @ 16"	#5 @ 12"	#6 @ 12"	#6 @ 6"	#6 @ 8"	4'-6"
10' TO 12'	2'-10"	5'-8"	1'-2"	1'-4"	#4 @ 14"	#6 @ 14"	#7 @ 12"	#7 @ 6"	#7 @ 8"	5'-6"

NOTES:

1. PROVIDE VERTICAL CONTROL JOINTS THROUGH THE STEM WALL AT 30'-0" ON-CENTER MAXIMUM. REFER TO FOUNDATION WALL CONTROL/CONSTRUCTION JOINT DETAILS FOR ADDITIONAL INFORMATION AND REQUIREMENTS.
2. CONCRETE SHALL HAVE A MINIMUM f'c = 4000 PSI AT 28 DAYS, A MAXIMUM W/C RATIO OF 0.45, AND AIR-ENTRAINMENT OF 6 PERCENT. PLUS/MINUS 1.50 AS DETERMINED BY ASTM C231.
3. BACKFILLING AND COMPACTION SHALL TAKE PLACE UNIFORMLY UP TO THE LOW SIDE GRADE ONCE THE STEM WALL CONCRETE HAS CURED FOR A MINIMUM OF 3 DAYS. BACKFILLING AND COMPACTION OF THE REMAINING HIGH SIDE FILL SHALL NOT COMMENCE UNTIL THE STEM WALL CONCRETE HAS CURED FOR 7 DAYS AND THE CONCRETE HAS ATTAINED A MINIMUM f'c = 3,000 PSI VERIFIED THROUGH CYLINDER TESTING.
4. THE TERM "DAYLIGHT" USED ABOVE MEANS A STORM DRAINAGE LINE, BASIN, OR OUTLET NOT SUBJECTED TO GROUNDWATER SURCHARGE. PERFORATED PVC PIPE SHALL BE LAID TO THE INVERT ELEVATIONS SHOWN OF PLANS. WHERE INVERTS ARE NOT SHOWN, MAINTAIN A MINIMUM DOWNWARD SLOPE OF 6" PER 100' TOWARDS "DAYLIGHT".
5. IF THE DIMENSION "C" IS LESS THAN OR EQUAL TO 1.50 TIMES "H", THEN THE EFFECTIVE "H" FOR RETAINING WALL DIMENSIONS AND REINFORCING SHALL BE "H" PLUS 2 FEET.
6. EXCAVATIONS, OPEN CUTS, SHORING, AND MAINTENANCE SHALL BE IN ACCORDANCE WITH THE LATEST OSHA REGULATIONS.

3
S-203

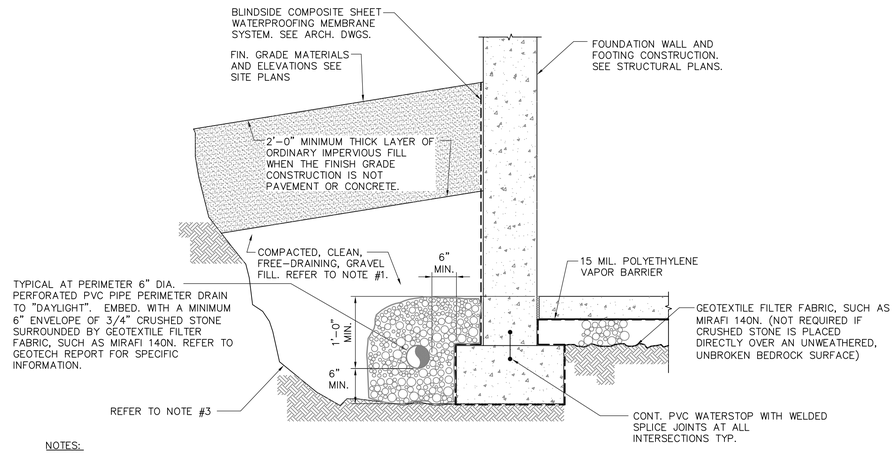

NOTES:

1. BACKFILLING AND COMPACTION SHALL TAKE PLACE UNIFORMLY UP TO THE LOW SIDE GRADE ONCE THE STEM WALL CONCRETE HAS CURED FOR A MINIMUM OF 3 DAYS. BACKFILLING AND COMPACTION OF THE REMAINING HIGH SIDE FILL SHALL NOT COMMENCE UNTIL THE STEM WALL CONCRETE HAS CURED FOR 7 DAYS AND THE CONCRETE HAS ATTAINED A MINIMUM f'c=3,000 PSI VERIFIED THROUGH CYLINDER TESTING.
2. THE TERM "DAYLIGHT" USED ABOVE MEANS A STORM DRAINAGE LINE, BASIN, OR OUTLET NOT SUBJECTED TO GROUNDWATER SURCHARGE. PERFORATED PVC PIPE SHALL BE LAID TO THE INVERT ELEVATIONS SHOWN ON PLANS. WHERE INVERTS ARE NOT SHOWN, MAINTAIN A MINIMUM DOWNWARD SLOPE OF 6" PER 100' TOWARDS "DAYLIGHT".
3. EXCAVATIONS, OPEN CUTS, SHORING, AND MAINTENANCE SHALL BE IN ACCORDANCE WITH THE LATEST OSHA REGULATIONS.
4. REFER TO THE GEOTECHNICAL REPORT FOR ADDITIONAL REQUIREMENTS.

PERIMETER DRAINAGE DETAIL

2
S-203

Date issued:

07-15-19

WINSLOW ARCHITECTS INC

89 MASSACHUSETTS AVE.
ARLINGTON, MA 02474

P: 781 648.6600
F: 781 648.6601

www.winslowarchitects.com

Owner/Developer:

-

52 Chauncy Street
Boston, MA 02111

Structural Engineer:

DM BERG CONSULTANTS, P.C.
STRUCTURAL ENGINEERS
SERVING THE INDUSTRY SINCE 1960
100 Crescent Road, Suite 1A
Needham, Massachusetts 02494-1457
P 781.444.5150 F 781.444.5157
E berg@dmbc.com

DMBC Project # 19057

Project:

MEDFIELD GREEN

Drawing:

TYPICAL DETAILS

Revisions:

No.	Description	Date
	FOUNDATIONS	7/15/19

Stamp:

COMMONWEALTH OF MASSACHUSETTS
WILLIAM H. BARRY
STRUCTURAL
No. 40985
REGISTERED
PROFESSIONAL ENGINEER

William H. Barry

ANY REPRODUCTION, POSSESSION OR USE OF THIS DRAWING WITHOUT THE WRITTEN PERMISSION OF WINSLOW ARCHITECTS INC. IS PROHIBITED. VIOLATORS WILL BE PROSECUTED TO THE FULL EXTENT OF THE LAW.

© 2019 WINSLOW ARCHITECTS, INC.

Project number:

16-515

Sheet:

S-203

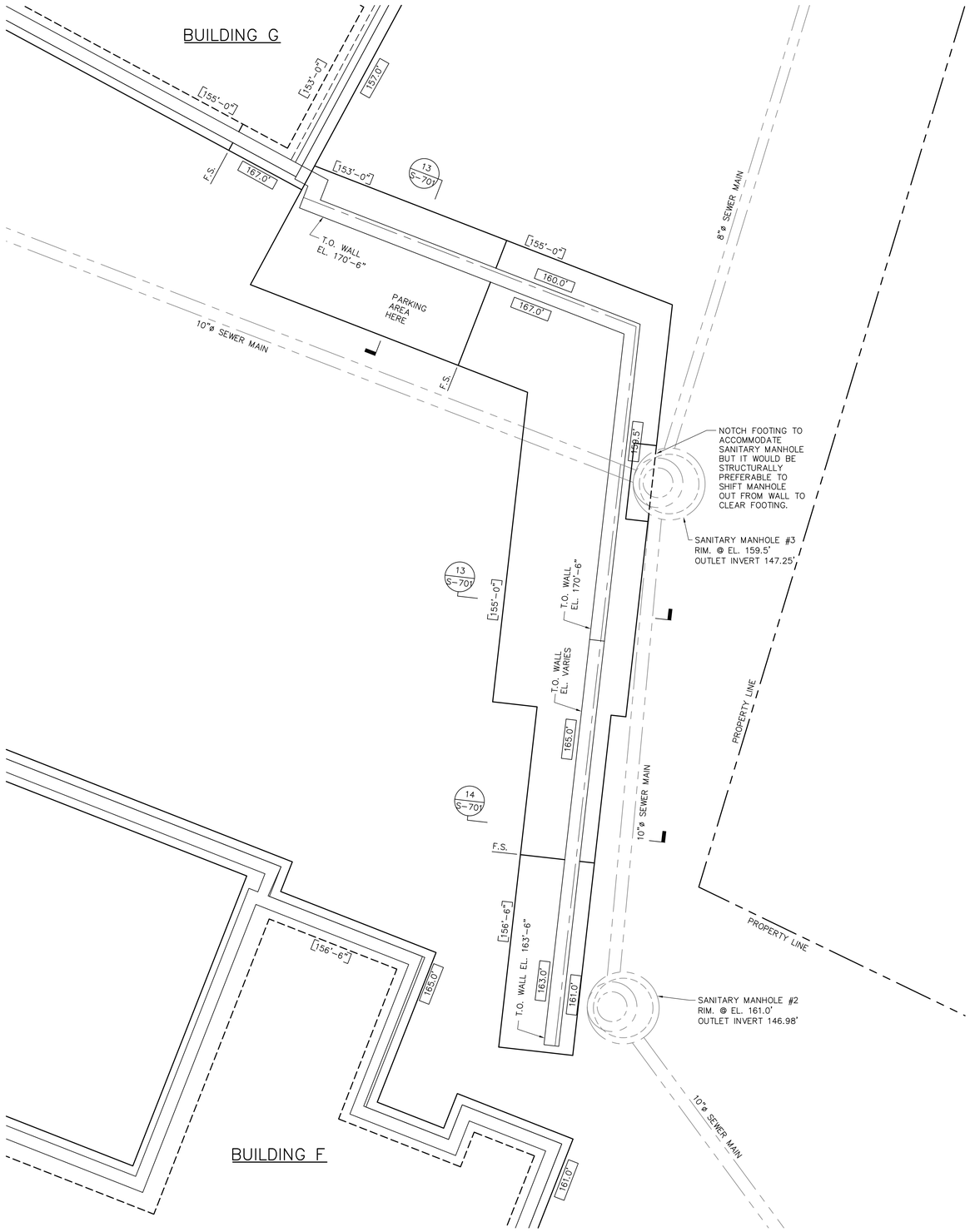

SITE RETAINING WALL FOUNDATION PART PLAN

SCALE: 1/4" = 1'-0"

NOTE "A"
NON-STRUCTURAL SLAB CONSTRUCTION

4" MINIMUM THICK CONCRETE SLAB REINFORCED WITH 6" x 6" – W4.0 x W4.0 W.W.M. PLACE MESH 3" OFF SUBGRADE ON DENSE CONCRETE BRICKS SPACED AT 3'-6" ON-CENTER, EACH DIRECTION. BEND THE MESH DOWN AT LAPS TO PROVIDE A MINIMUM TOP COVER OF 3/4". CAST SLAB ON A 10 MIL. POLYETHYLENE VAPOR RETARDER AND 12" MINIMUM THICK LAYER OF COMPACTED (95 % MINIMUM AS MEASURED BY MODIFIED PROCTOR, METHOD C) GRAVEL FILL. REFER TO SOIL BEARING NOTES ON DRAWING S-101 FOR REQUIREMENTS.
TOP OF SLAB ELEVATION SEE PLAN
UNLESS OTHERWISE NOTED IN DRAWINGS.

NOTE "AG"
NON-STRUCTURAL GARAGE SLAB CONSTRUCTION

5" MINIMUM THICK CONCRETE SLAB REINFORCED WITH 6" x 6" – W4.0 x W4.0 EPOXY COATED W.W.M. PLACE MESH 3" OFF SUBGRADE ON DENSE CONCRETE BRICKS SPACED AT 3'-6" ON-CENTER, EACH DIRECTION. BEND THE MESH DOWN AT LAPS TO PROVIDE A MINIMUM TOP COVER OF 3/4". CAST SLAB ON A 10 MIL. POLYETHYLENE VAPOR RETARDER AND 12" MINIMUM THICK LAYER OF COMPACTED (95 % MINIMUM AS MEASURED BY MODIFIED PROCTOR, METHOD C) GRAVEL FILL. REFER TO SOIL BEARING NOTES ON DRAWING S-101 FOR REQUIREMENTS.
TOP OF SLAB ELEVATION SEE PLAN
UNLESS OTHERWISE NOTED IN DRAWINGS.

FOOTING SCHEDULE

MARK	SIZE (L x W x T)	REINFORCING
F2	2'-0" x 2'-0" x 1'-0"	3 – #4 B.E.W.
F3	3'-0" x 3'-0" x 1'-0"	4 – #4 B.E.W.
F4	4'-0" x 4'-0" x 1'-0"	5 – #4 B.E.W.

PIER / PILASTER SCHEDULE

MARK	SIZE	VERTICAL REINFORCING	TIES (INCHES-ON-CENTER)
P-R	10"ø	3 – #5	#3 @ 10"
P-1	10" x 10"	4 – #4	#3 @ 8"

PIER NOTES:

1. TOP OF PIER ELEVATION TO BE SET 8" ABOVE FINISH GRADE.
2. PROVIDE GALV. 5/8"ø x 10" LONG HOOKED ANCHOR RODS AT CENTER OF P-R PIERS FOR ANCHORING ABU66 POST BASES FOR P.T. 6x6 POSTS.

FOUNDATION NOTES:

1. THE BOTTOM OF ALL FOOTINGS SHALL BE A MINIMUM OF 4'-0" BELOW EXTERIOR FINISHED GRADE.
2. THE TOP OF INTERIOR FOOTINGS SHALL BE A MINIMUM OF 6" BELOW TOP OF FINISHED CONCRETE SLAB.
3. [-0'-0"] ON PLAN INDICATES ESTIMATED BOTTOM OF FOOTING ELEVATION.
4. 00.0'± ON PLAN INDICATES APPROXIMATE FINISH GRADE ELEVATION. REFER TO SITE AND ARCHITECTURAL DRAWINGS.
5. S.C.J. ON PLAN INDICATES SLAB CONTROL JOINT. REFER TO TYPICAL DETAIL. PROVIDE SLAB CONTROL JOINTS @ 12'-0" O.C. EA. WAY MAX. JOINTS PARALLEL TO THICKENED SLABS SHALL BE LOCATED 2'-0" MIN. FROM THICKENED SLABS.
6. F.S. ON PLAN INDICATES FOOTING STEP. REFER TO TYPICAL DETAIL
7. PROVIDE FOUNDATION WALL CONTROL JOINTS AS PER TYPICAL DETAIL.
8. P-# ON PLAN INDICATES PIER/PILASTER. REFER TO SCHEDULE.
9. F# ON PLAN INDICATES COLUMN FOOTING. REFER TO SCHEDULE.
10. C-# ON PLAN INDICATES STEEL COLUMN. REFER TO SCHEDULE.
11. GENERAL CONTRACTOR SHALL COORDINATE WITH THE ARCHITECTURAL DRAWINGS FOR POSSIBLE DIMENSIONAL DIFFERENCES AND FOR DOORWAY LOCATIONS BOTH INTERIOR AND EXTERIOR. ARCHITECTURAL DRAWINGS SHALL GOVERN FINAL DIMENSIONS.
12. GENERAL CONTRACTOR COORDINATE WITH ELECTRICAL SUB CONTRACTOR FOR NECESSARY CONCRETE ENCASED ELECTRODES IN ACCORDANCE WITH MASSACHUSETTS ELECTRICAL CODE REQUIREMENTS.
13. GENERAL CONTRACTOR SHALL COORDINATE ALL PLUMBING INVERTS AND PIPE LOCATIONS WITH UNDERGROUND PLUMBING TO AVOID CONFLICTS WITH FOOTINGS AND THICKENED SLABS. IT MAY BE NECESSARY TO LOWER INTERIOR FOOTINGS TO AVOID PIPE SWEEPS DIRECTLY OVER FOOTINGS.
14. — — — ON PLAN INDICATES APPROXIMATE LOCATION OF PIPE PENETRATIONS. REFER TO TYPICAL DETAIL.
15. AT ALL EXTERIOR EQUIPMENT/DUMPSTERS PROVIDE 12" THICK 4000 PSI AIR-ENTRAINED CONC. PAD REINF. W/ #4 @ 12" O.C. E.W. T. & B. PLACE SLAB ON 2'-0" MIN. COMPACTED STRUCTURAL FILL. SIZE AND LOCATIONS AS REQUIRED BY ARCHITECT. REFER TO TYPICAL DETAIL.
16. ALL SITEWORK BY OTHERS IS SHOWN FOR REFERENCE ONLY. REFER TO CIVIL/SITE DRAWING FOR ALL ADDITIONAL INFORMATION.

BACKFILL NOTE:

DO NOT BACKFILL AGAINST THE FULL HEIGHT BASEMENT FOUNDATION WALLS UNTIL THE FIRST FLOOR FRAMING, SHEATHING AND CONNECTIONS HAVE BEEN FULLY INSTALLED TO PROPERLY BRACE THE TOP OF THESE WALLS.

GEOTECHNICAL INVESTIGATION:

A GEOTECHNICAL INVESTIGATION MUST BE CONDUCTED IN ACCORDANCE WITH SECTION 1803 OF THE MASSACHUSETTS STATE BUILDING CODE. THE INVESTIGATION SHALL ASCERTAIN ALL APPLICABLE INFORMATION REQUIRED BY THE BUILDING CODE AND VERIFY THE GEOTECHNICAL INFORMATION USED BY THE STRUCTURAL ENGINEER OF RECORD TO PREPARE THESE DOCUMENTS:

THE FOUNDATIONS INDICATED HEREIN ARE BASED ON A PRESUMED BEARING CAPACITY OF 2.0 TSF BEARING, A SEISMIC SITE COEFFICIENT OF D, AND AN EQUIVALENT FLUID PRESSURE OF 40 PSF FOR SITE WALLS AND 60 PSF FOR FULL HEIGHT FOUNDATION WALLS.

Date issued:

07-15-19

WINSLOW ARCHITECTS INC

89 MASSACHUSETTS AVE.
ARLINGTON, MA 02474

P: 781 648.6600
F: 781 648.6601

www.winslowarchitects.com

Owner/Developer:

-

52 Chauncy Street
Boston, MA 02111

Structural Engineer:

DM BERG CONSULTANTS, P.C.
STRUCTURAL ENGINEERS
SERVING THE INDUSTRY SINCE 1960
100 CHESTNUT ROAD, SUITE 1A
NEEDHAM, MASSACHUSETTS 02494-1437
P 781.444.5757 F 781.444.5757
E DMBERG@DMBERG.COM

DMBC Project # 19057

Project:

MEDFIELD GREEN

Drawing:

FOUNDATION PLANS NOTES AND SCHEDULES, SITE RETAINING WALL FNDN. PLAN

Revisions:

No.	Description	Date
	FOUNDATIONS	7/15/19

Stamp:

COMMONWEALTH OF MASSACHUSETTS
WILLIAM H. BARRY
STRUCTURAL
No. 40985
REGISTERED
PROFESSIONAL ENGINEER

ANY REPRODUCTION, POSSESSION OR USE OF THIS DRAWING WITHOUT THE WRITTEN PERMISSION OF WINSLOW ARCHITECTS INC. IS PROHIBITED. VIOLATORS WILL BE PROSECUTED TO THE FULL EXTENT OF THE LAW.

© 2019 WINSLOW ARCHITECTS, INC.

Project number:

16-515

Sheet:

S-300

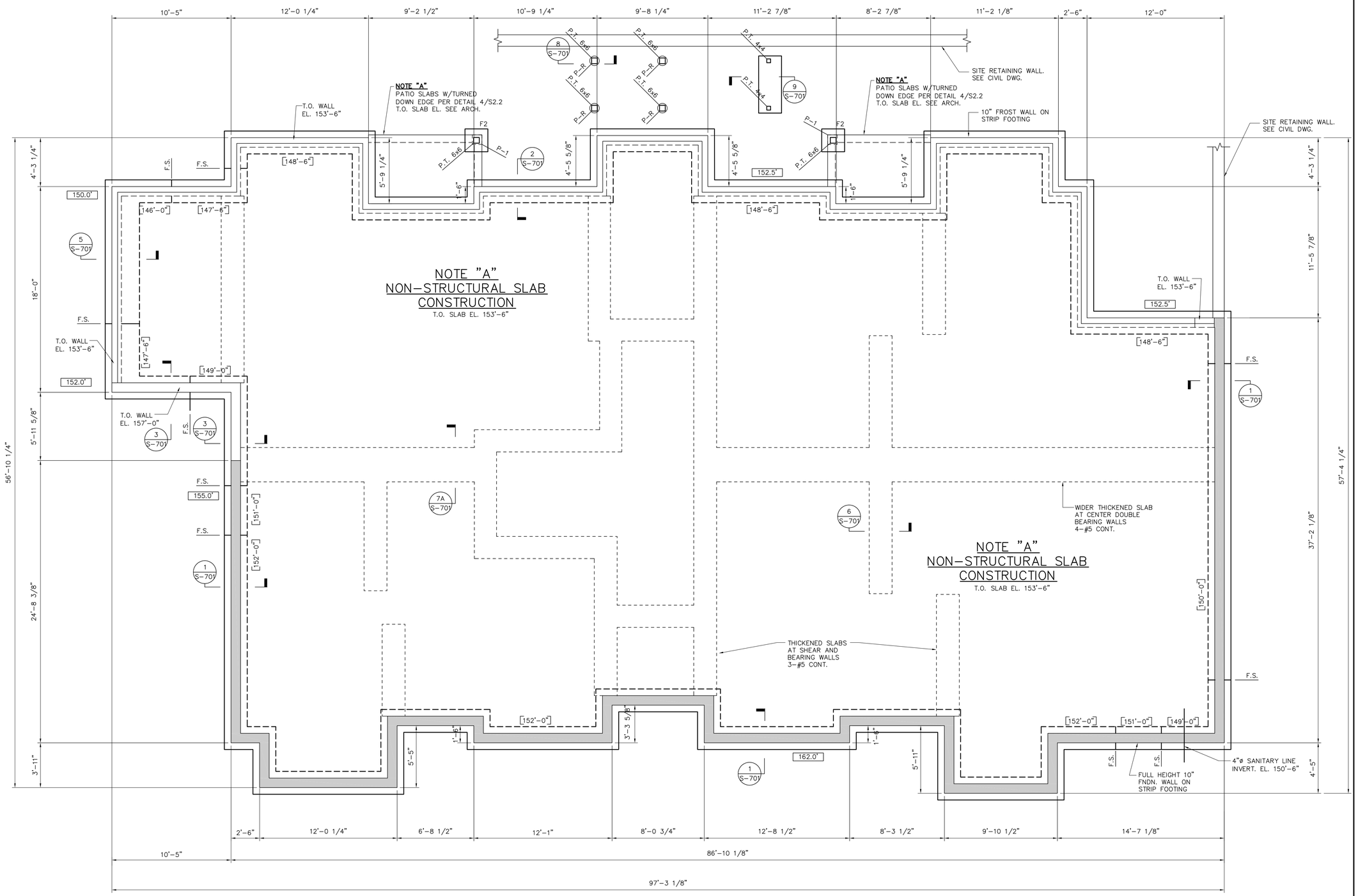

FOUNDATION AND BASEMENT FLOOR PLAN

SCALE: 1/4" = 1'-0"

NOTE:
REFER TO DRAWING S-300 FOR ADDITIONAL REQUIREMENTS.

Date issued:

07-15-19

WINSLOW ARCHITECTS INC

89 MASSACHUSETTS AVE.
ARLINGTON, MA 02474

P: 781 648.6600
F: 781 648.6601

www.winslowarchitects.com

Owner/Developer:

-

52 Chauncy Street
Boston, MA 02111

Structural Engineer:

DMBC STRUCTURAL ENGINEERS
DM BERG CONSULTANTS, P.C.
SERVING THE INDUSTRY SINCE 1965
100 CRESCENT ROAD, SUITE 1A
NEEDHAM, MASSACHUSETTS 02494-1457
P 781.444.5150 F 781.444.5157
www.dmbergpc.com

DMBC Project # 19057

Project:

MEDFIELD GREEN

Drawing:

BUILDING A FOUNDATION AND LOWER LEVEL FLOOR PLAN

Revisions:

No.	Description	Date
	FOUNDATIONS	7/15/19

Stamp:

COMMONWEALTH OF MASSACHUSETTS
WILLIAM H. BARRY
STRUCTURAL
No. 40985
REGISTERED
PROFESSIONAL ENGINEER

ANY REPRODUCTION, POSSESSION OR USE OF THIS DRAWING WITHOUT THE WRITTEN PERMISSION OF WINSLOW ARCHITECTS INC. IS PROHIBITED. VIOLATORS WILL BE PROSECUTED TO THE FULL EXTENT OF THE LAW.

© 2019 WINSLOW ARCHITECTS, INC.

Project number:

16-515

Sheet:

S-301-A

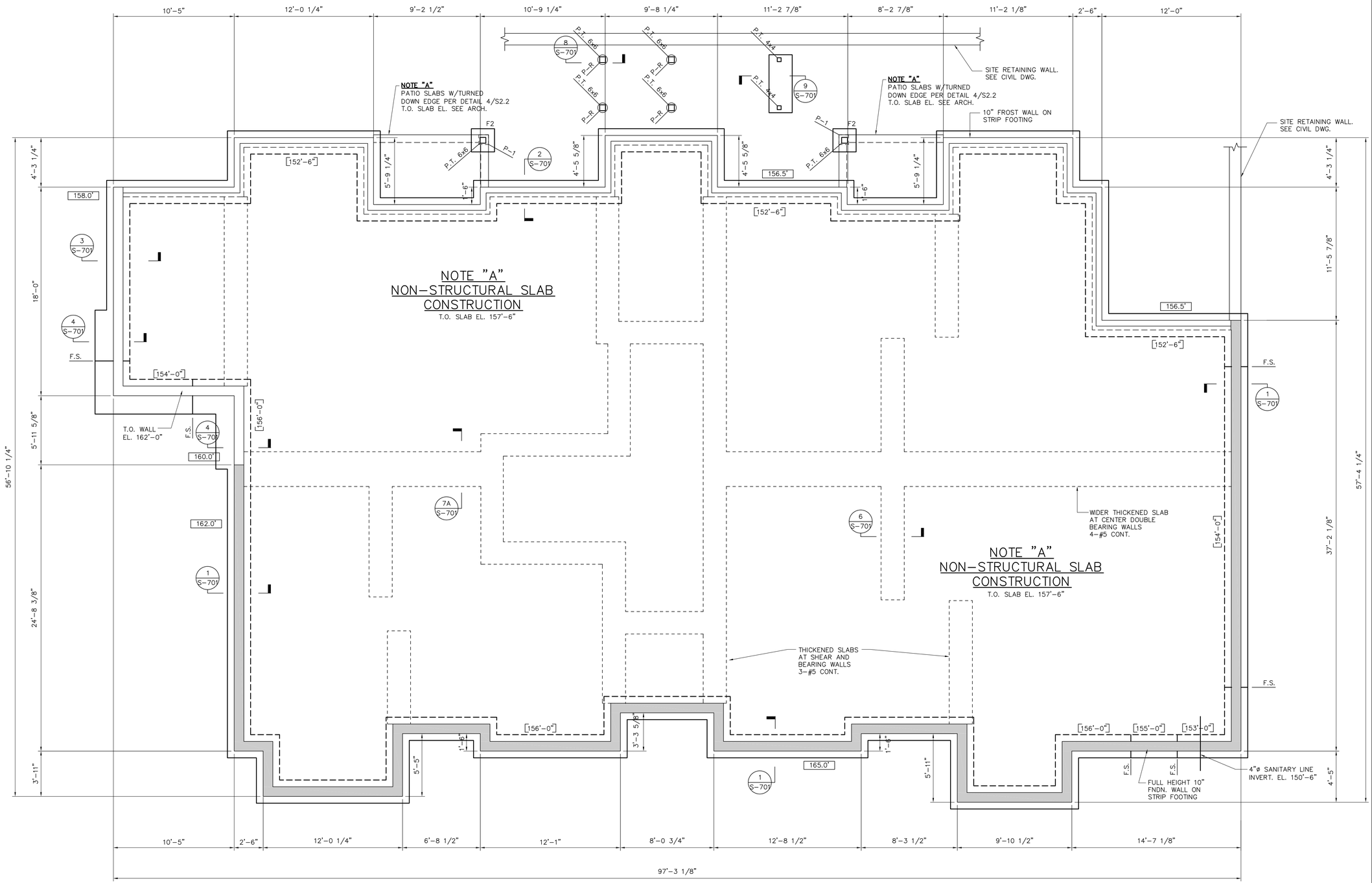

FOUNDATION AND BASEMENT FLOOR PLAN

SCALE: 1/4" = 1'-0"

NOTE:
REFER TO DRAWING S-300 FOR ADDITIONAL REQUIREMENTS.

Date issued:

07-15-19

WINSLOW ARCHITECTS INC

89 MASSACHUSETTS AVE.
ARLINGTON, MA 02474

P: 781 648.6600
F: 781 648.6601

www.winslowarchitects.com

Owner/Developer:

-

52 Chauncy Street
Boston, MA 02111

Structural Engineer:

DMBC STRUCTURAL ENGINEERS
DM BERG CONSULTANTS, P.C.
SERVING THE INDUSTRY SINCE 1965
100 CRESCENT ROAD, SUITE 1A
NEEDHAM, MASSACHUSETTS 02494-1657
P 781.444.5156 F 781.444.5157
WWW.DMBERG.COM

DMBC Project # 19057

Project:

MEDFIELD GREEN

Drawing:

BUILDING B FOUNDATION AND LOWER LEVEL FLOOR PLAN

Revisions:

No.	Description	Date
	FOUNDATIONS	7/15/19

Stamp:

COMMONWEALTH OF MASSACHUSETTS
WILLIAM H. BARRY
STRUCTURAL
No. 40985
REGISTERED PROFESSIONAL ENGINEER

William H. Barry

ANY REPRODUCTION, POSSESSION OR USE OF THIS DRAWING WITHOUT THE WRITTEN PERMISSION OF WINSLOW ARCHITECTS INC. IS PROHIBITED. VIOLATORS WILL BE PROSECUTED TO THE FULL EXTENT OF THE LAW.

© 2019 WINSLOW ARCHITECTS, INC.

Project number:

16-515

Sheet:

S-301-B

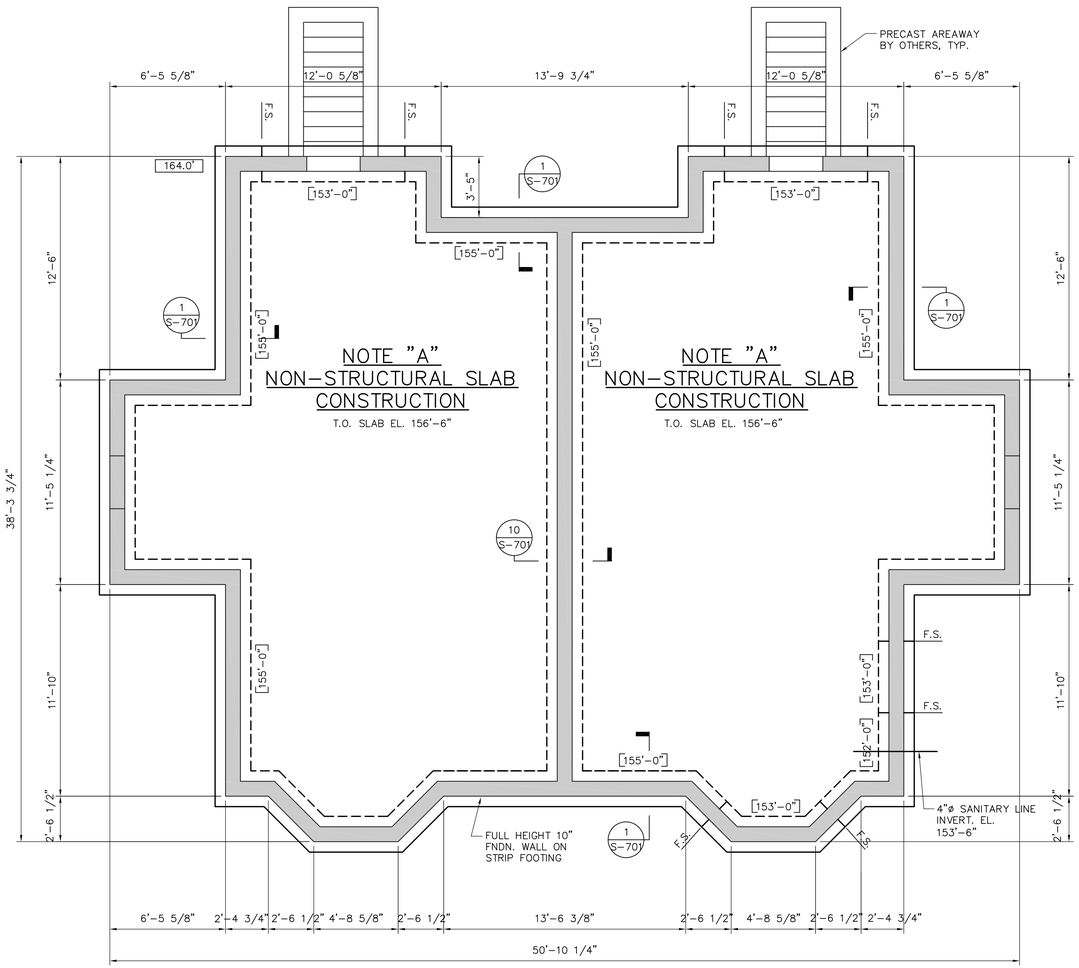

BUILDING C

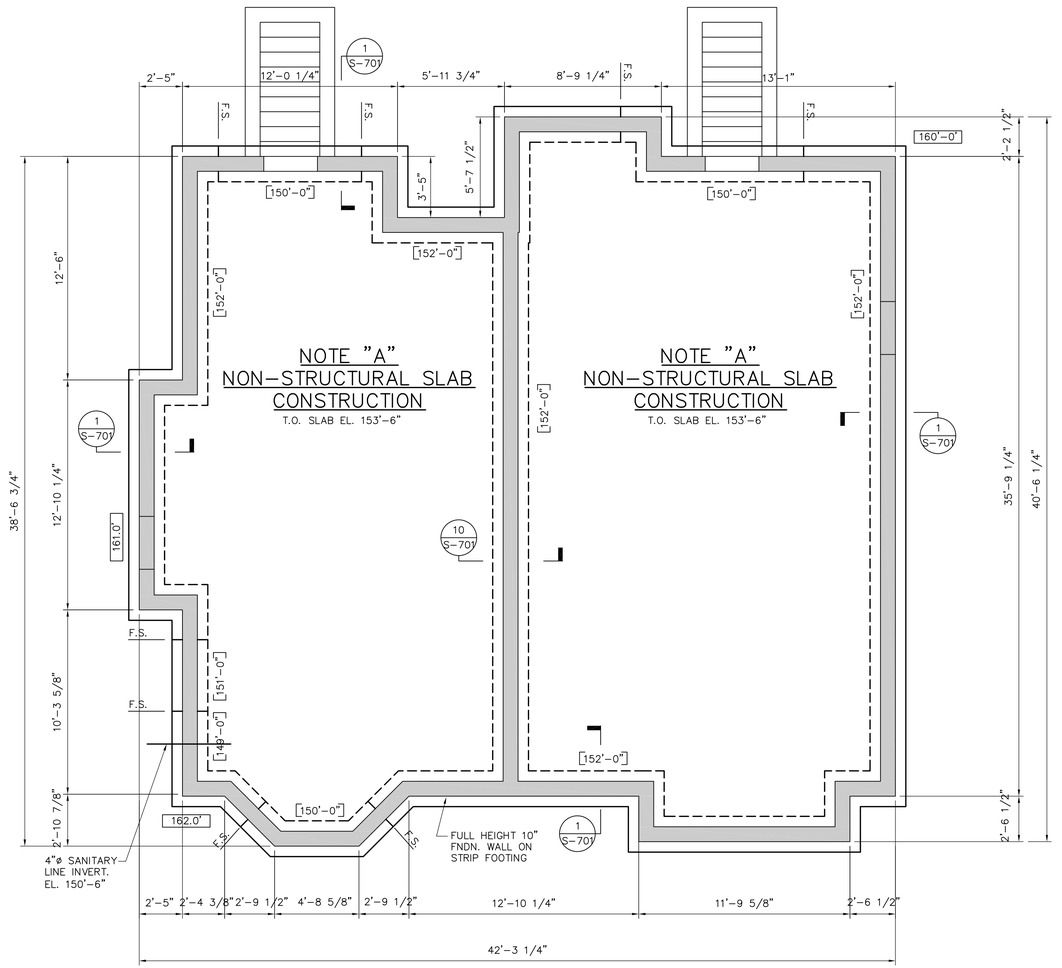

BUILDING D

FOUNDATION AND BASEMENT FLOOR PLANS

SCALE: 1/4" = 1'-0"

NOTE:
REFER TO DRAWING S-300 FOR ADDITIONAL REQUIREMENTS.

Date issued:

07-15-19

WINSLOW ARCHITECTS INC

89 MASSACHUSETTS AVE.
ARLINGTON, MA 02474

P: 781 648.6600
F: 781 648.6601

www.winslowarchitects.com

Owner/Developer:

-

52 Chauncy Street
Boston, MA 02111

Structural Engineer:

DMBC STRUCTURAL ENGINEERS
DM BERG CONSULTANTS, P.C.
SERVING THE INDUSTRY SINCE 1965
100 CRESCENT ROAD, SUITE 1A
NEEDHAM, MASSACHUSETTS 02494-1657
P 781.444.5156 F 781.444.5157
WWW.DMBERG.COM

DMBC Project # 19057

Project:

MEDFIELD GREEN

Drawing:

BUILDING C & D FOUNDATION AND BASEMENT FLOOR PLANS

Revisions:

No.	Description	Date
	FOUNDATIONS	7/15/19

Stamp:

COMMONWEALTH OF MASSACHUSETTS
WILLIAM H. BARRY
STRUCTURAL
No. 40985
REGISTERED PROFESSIONAL ENGINEER

William H. Barry

ANY REPRODUCTION, POSSESSION OR USE OF THIS DRAWING WITHOUT THE WRITTEN PERMISSION OF WINSLOW ARCHITECTS INC. IS PROHIBITED. VIOLATORS WILL BE PROSECUTED TO THE FULL EXTENT OF THE LAW.

© 2019 WINSLOW ARCHITECTS, INC.

Project number:

16-515

Sheet:

S-301-CD

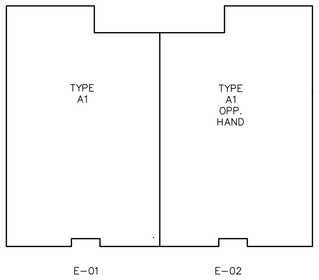

BUILDING E FRAMING KEY PLAN

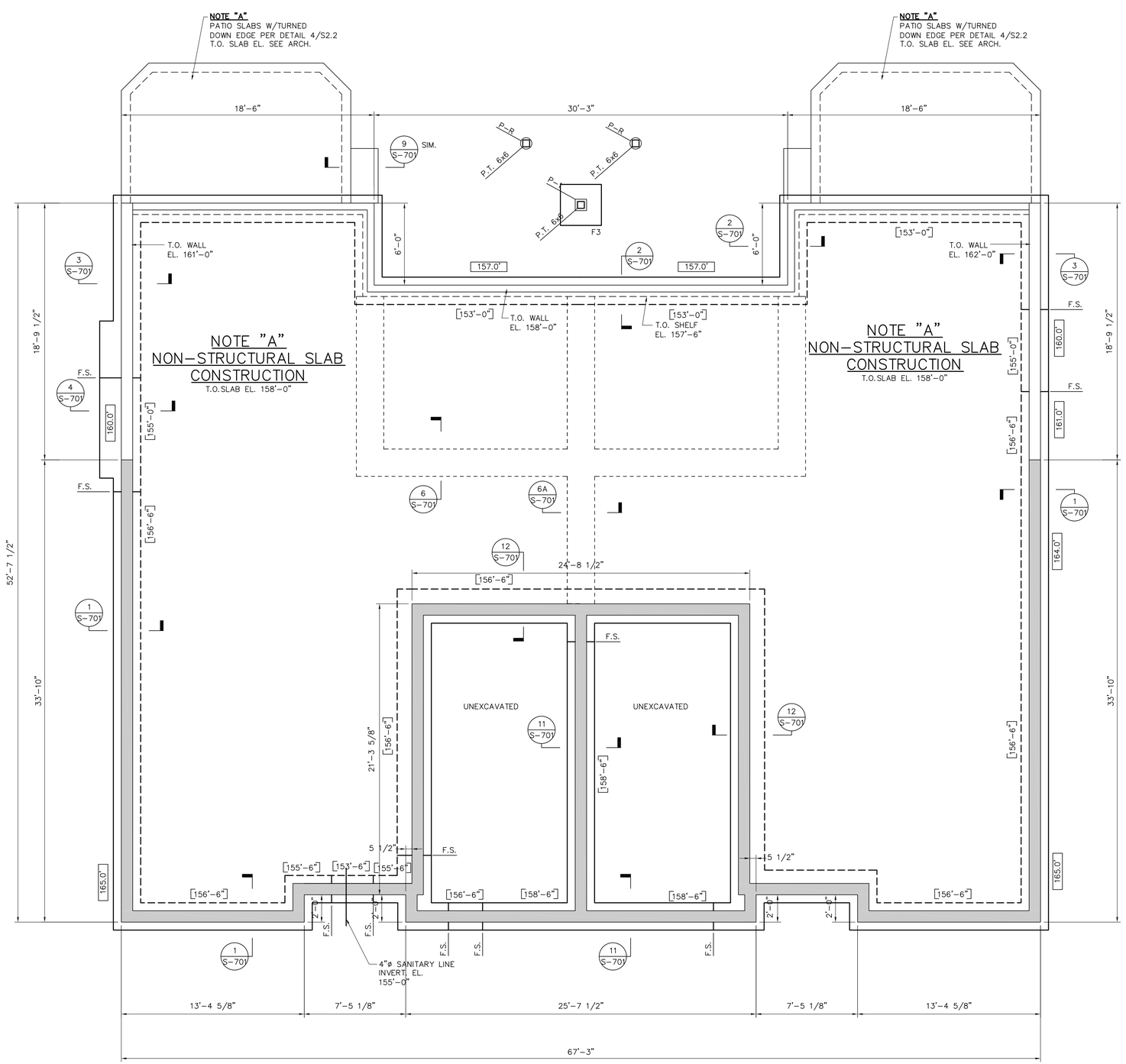

FOUNDATION AND BASEMENT FLOOR PLAN

SCALE: 1/4" = 1'-0"

NOTES:

1. REFER TO DRAWING S-300 FOR ADDITIONAL REQUIREMENTS.
2. REFER TO UNIT FRAMING PLANS AS PER KEY PLAN FOR PIERS AND FOOTINGS, TOP OF WALL ELEVATIONS AND SECTIONS AT FRONT OF BUILDING AND GARAGES.

Date issued:

07-15-19

WINSLOW ARCHITECTS INC

89 MASSACHUSETTS AVE.
ARLINGTON, MA 02474

P: 781 648.6600
F: 781 648.6601

www.winslowarchitects.com

Owner/Developer:

-

52 Chauncy Street
Boston, MA 02111

Structural Engineer:

DMBC STRUCTURAL ENGINEERS
DM BERG CONSULTANTS, P.C.
SERVING THE INDUSTRY SINCE 1965
100 CRESCENT ROAD, SUITE 1A
NEEDHAM, MASSACHUSETTS 02494-1657
P 781.444.5156 F 781.444.5157
WWW.DMBERG.COM

DMBC Project # 19057

Project:

MEDFIELD GREEN

Drawing:

BUILDING E FOUNDATION AND LOWER LEVEL FLOOR PLAN

Revisions:

No.	Description	Date
	FOUNDATIONS	7/15/19

Stamp:

COMMONWEALTH OF MASSACHUSETTS
WILLIAM H. BARRY
STRUCTURAL
No. 40985
REGISTERED PROFESSIONAL ENGINEER

William H. Barry

ANY REPRODUCTION, POSSESSION OR USE OF THIS DRAWING WITHOUT THE WRITTEN PERMISSION OF WINSLOW ARCHITECTS INC. IS PROHIBITED. VIOLATORS WILL BE PROSECUTED TO THE FULL EXTENT OF THE LAW.

© 2019 WINSLOW ARCHITECTS, INC.

Project number:

16-515

Sheet:

S-301-E

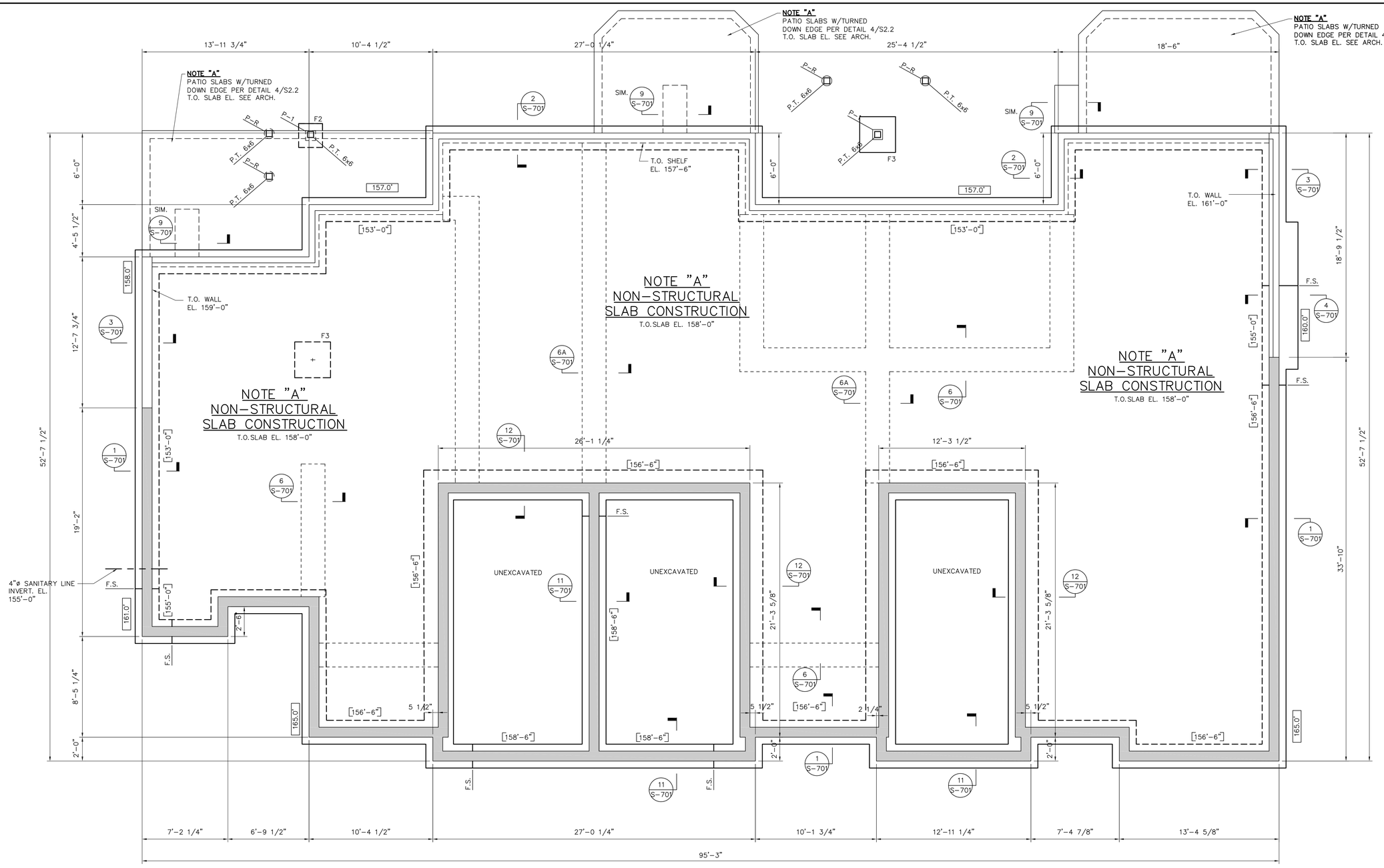

FOUNDATION AND BASEMENT FLOOR PLAN

SCALE: 1/4" = 1'-0"

NOTES:

1. REFER TO DRAWING S-300 FOR ADDITIONAL REQUIREMENTS.
2. REFER TO UNIT FRAMING PLANS AS PER KEY PLAN FOR PIERS AND FOOTINGS, TOP OF WALL ELEVATIONS AND SECTIONS AT FRONT OF BUILDING AND GARAGES.

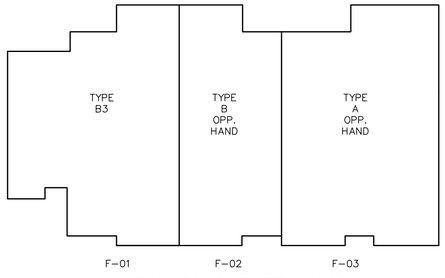

BUILDING F FRAMING KEY PLAN

Date issued:

07-15-19

WINSLOW ARCHITECTS INC

89 MASSACHUSETTS AVE.
ARLINGTON, MA 02474

P: 781 648.6600
F: 781 648.6601

www.winslowarchitects.com

Owner/Developer:

-

52 Chauncy Street
Boston, MA 02111

Structural Engineer:

DMBC STRUCTURAL ENGINEERS
DM BERG CONSULTANTS, P.C.
SERVING THE INDUSTRY SINCE 1965
100 CRESCENT ROAD, SUITE 1A
NEEDHAM, MASSACHUSETTS 02494-1457
P 781.444.5150 F 781.444.5157
www.dmberg.com

DMBC Project # 19057

Project:

MEDFIELD GREEN

Drawing:

BUILDING F FOUNDATION AND LOWER LEVEL FLOOR PLAN

Revisions:

No.	Description	Date
	FOUNDATIONS	7/15/19

Stamp:

COMMONWEALTH OF MASSACHUSETTS
WILLIAM H. BARRY
STRUCTURAL
No. 40985
REGISTERED
PROFESSIONAL ENGINEER

William H. Barry

ANY REPRODUCTION, POSSESSION OR USE OF THIS DRAWING WITHOUT THE WRITTEN PERMISSION OF WINSLOW ARCHITECTS INC. IS PROHIBITED. VIOLATORS WILL BE PROSECUTED TO THE FULL EXTENT OF THE LAW.

© 2019 WINSLOW ARCHITECTS, INC.

Project number:

16-515

Sheet:

S-301-F

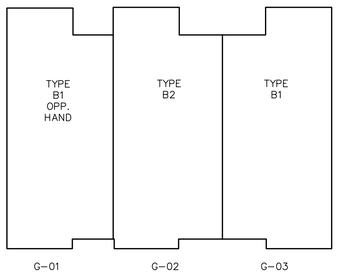

BUILDING G FRAMING KEY PLAN

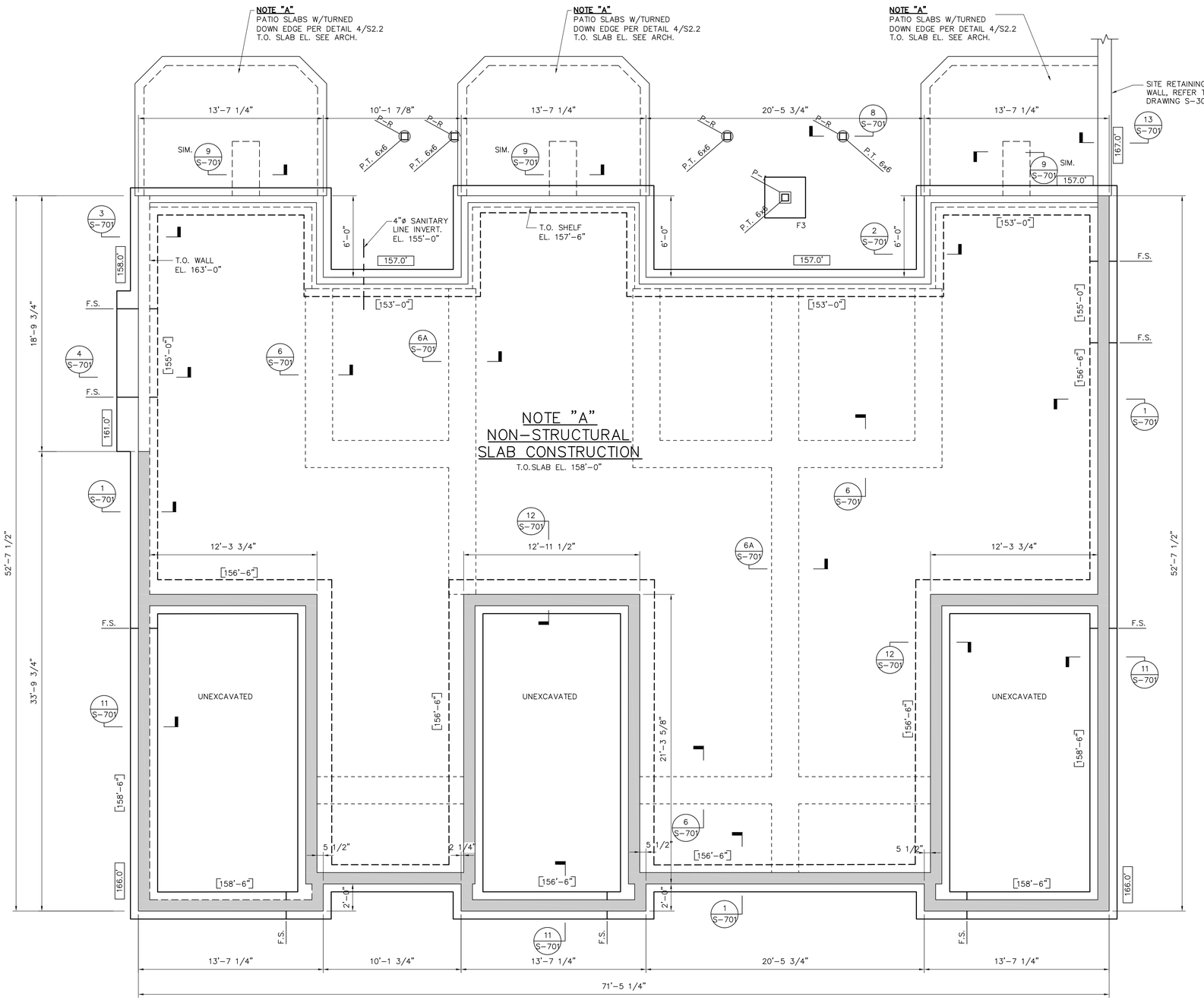

FOUNDATION AND BASEMENT FLOOR PLAN

SCALE: 1/4" = 1'-0"

NOTES:

1. REFER TO DRAWING S-300 FOR ADDITIONAL REQUIREMENTS.
2. REFER TO UNIT FRAMING PLANS AS PER KEY PLAN FOR PIERS AND FOOTINGS, TOP OF WALL ELEVATIONS AND SECTIONS AT FRONT OF BUILDING AND GARAGES.

Date issued:

07-15-19

WINSLOW ARCHITECTS INC

89 MASSACHUSETTS AVE.
ARLINGTON, MA 02474

P: 781 648.6600
F: 781 648.6601

www.winslowarchitects.com

Owner/Developer:

-

52 Chauncy Street
Boston, MA 02111

Structural Engineer:

DMBC STRUCTURAL ENGINEERS
DM BERG CONSULTANTS, P.C.
SERVING THE INDUSTRY SINCE 1963
100 CRESCENT ROAD, SUITE 1A
NEEDHAM, MASSACHUSETTS 02494-1657
P 781.444.5156 F 781.444.5157
WWW.DMBERG.COM

DMBC Project # 19057

Project:

MEDFIELD GREEN

Drawing:

BUILDING G FOUNDATION AND LOWER LEVEL FLOOR PLAN

Revisions:

No.	Description	Date
	FOUNDATIONS	7/15/19

Stamp:

COMMONWEALTH OF MASSACHUSETTS
WILLIAM H. BARRY
STRUCTURAL
No. 40985
REGISTERED PROFESSIONAL ENGINEER

William H. Barry

ANY REPRODUCTION, POSSESSION OR USE OF THIS DRAWING WITHOUT THE WRITTEN PERMISSION OF WINSLOW ARCHITECTS INC. IS PROHIBITED. VIOLATORS WILL BE PROSECUTED TO THE FULL EXTENT OF THE LAW.

© 2019 WINSLOW ARCHITECTS, INC.

Project number:

16-515

Sheet:

S-301-G

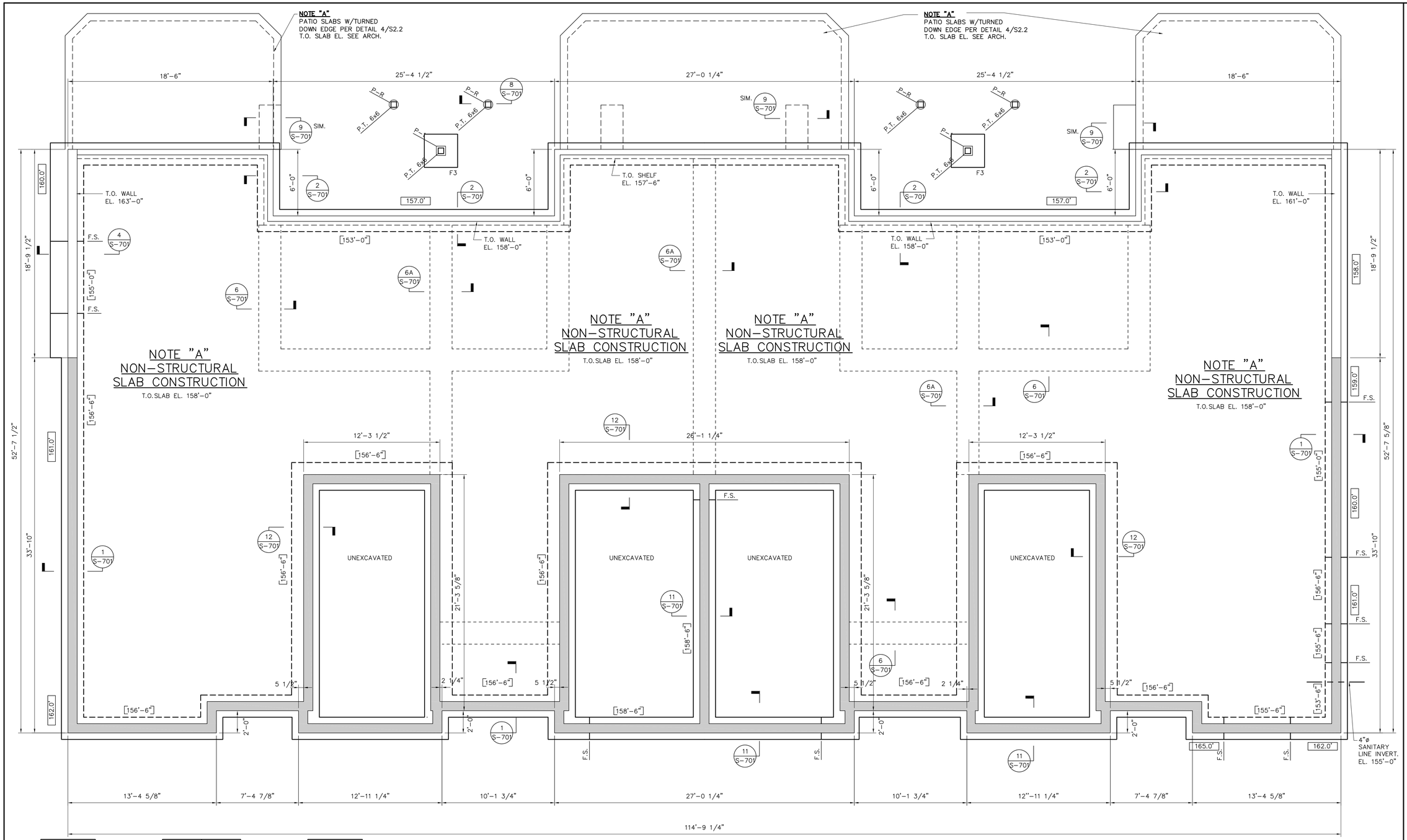

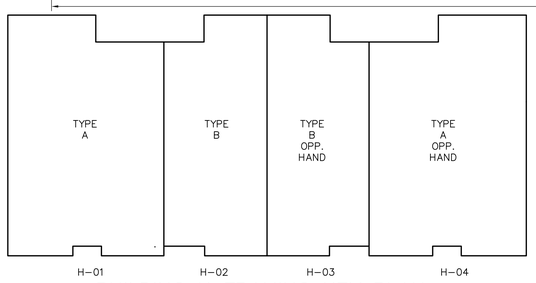

BUILDING H FRAMING KEY PLAN

FOUNDATION AND BASEMENT FLOOR PLAN

SCALE: 1/4" = 1'-0"

NOTES:

1. REFER TO DRAWING S-300 FOR ADDITIONAL REQUIREMENTS.
2. REFER TO UNIT FRAMING PLANS AS PER KEY PLAN FOR PIERS AND FOOTINGS, TOP OF WALL ELEVATIONS AND SECTIONS AT FRONT OF BUILDING AND GARAGES.

Date issued:

07-15-19

WINSLOW ARCHITECTS INC

89 MASSACHUSETTS AVE.
ARLINGTON, MA 02474

P: 781 648.6600
F: 781 648.6601

www.winslowarchitects.com

Owner/Developer:

-

52 Chauncy Street
Boston, MA 02111

Structural Engineer:

DMBC STRUCTURAL ENGINEERS
DM BERG CONSULTANTS, P.C.
SERVING THE INDUSTRY SINCE 1965
100 CRESCENT ROAD, SUITE 1A
NEEDHAM, MASSACHUSETTS 02494-1657
P 781.444.5156 F 781.444.5157
www.dmberg.com

DMBC Project # 19057

Project:

MEDFIELD GREEN

Drawing:

BUILDING H FOUNDATION AND BASEMENT FLOOR PLAN

Revisions:

No.	Description	Date
	FOUNDATIONS	7/15/19

Stamp:

COMMONWEALTH OF MASSACHUSETTS
WILLIAM H. BARRY
STRUCTURAL
No. 40985
REGISTERED
PROFESSIONAL ENGINEER

ANY REPRODUCTION, POSSESSION OR USE OF THIS DRAWING WITHOUT THE WRITTEN PERMISSION OF WINSLOW ARCHITECTS INC. IS PROHIBITED. VIOLATORS WILL BE PROSECUTED TO THE FULL EXTENT OF THE LAW.

© 2019 WINSLOW ARCHITECTS, INC.

Project number:

16-515

Sheet:

S-301-H

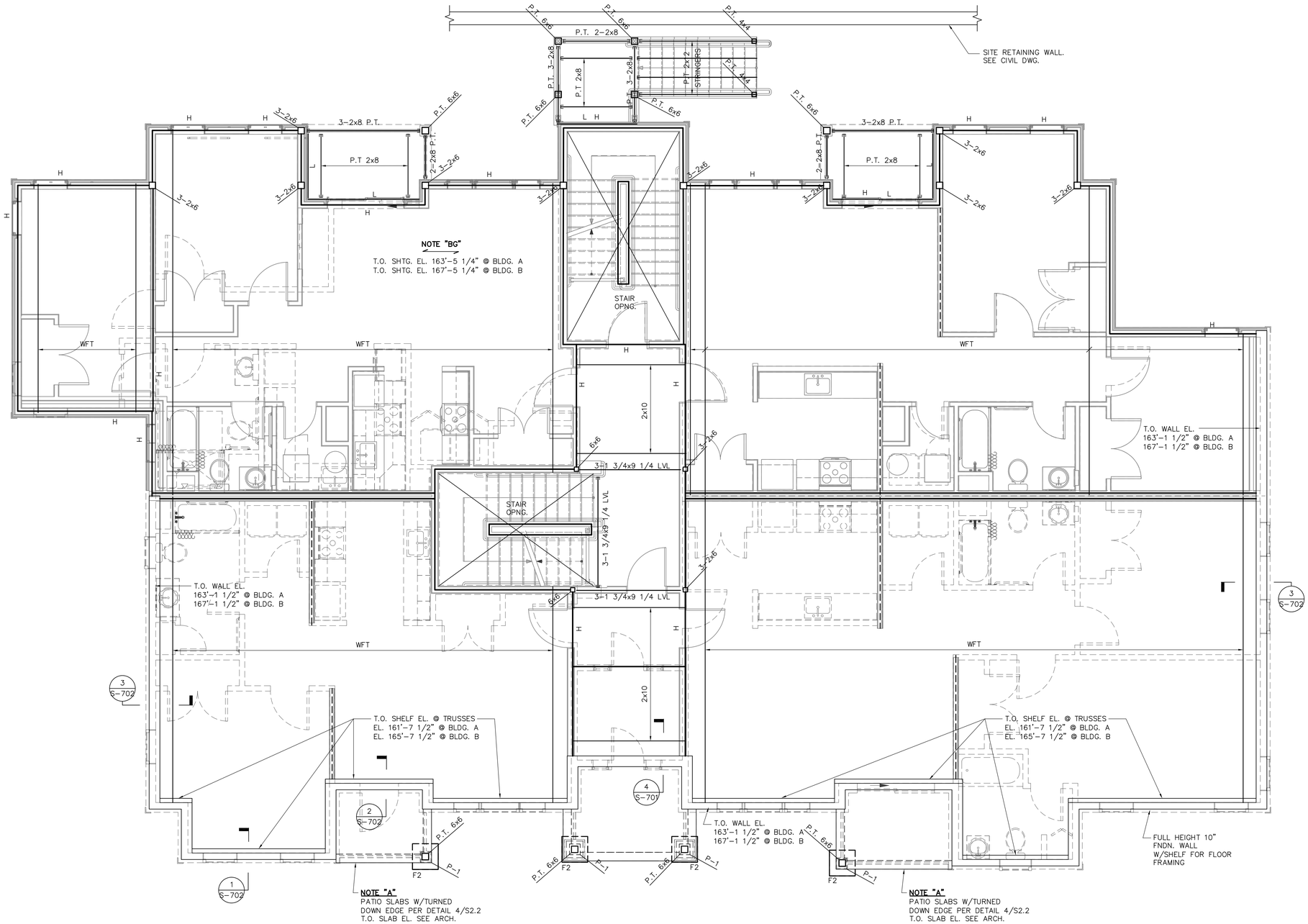

FIRST FLOOR FRAMING PLAN

SCALE: 1/4" = 1'-0"

NOTE:
REFER TO DRAWINGS S-300 AND S-400 FOR ADDITIONAL REQUIREMENTS.

Date issued:

07-15-19

WINSLOW ARCHITECTS INC

89 MASSACHUSETTS AVE.
ARLINGTON, MA 02474

P: 781 648.6600
F: 781 648.6601

www.winslowarchitects.com

Owner/Developer:

-

52 Chauncy Street
Boston, MA 02111

Structural Engineer:

DMBC STRUCTURAL ENGINEERS
DM BERG CONSULTANTS, P.C.
SERVING THE INDUSTRY SINCE 1943
100 CRESCENT ROAD, SUITE 1A
NEEDHAM, MASSACHUSETTS 02494-1457
P 781.444.5156 F 781.444.5157
WWW.DMBERG.COM

DMBC Project # 19057

Project:

MEDFIELD GREEN

Drawing:

BUILDINGS A & B FIRST FLOOR FRAMING PLAN

Revisions:

No.	Description	Date
	FOUNDATIONS	7/15/19

Stamp:

COMMONWEALTH OF MASSACHUSETTS
WILLIAM H. BARRY
STRUCTURAL
No. 40985
REGISTERED PROFESSIONAL ENGINEER

William H. Barry

ANY REPRODUCTION, POSSESSION OR USE OF THIS DRAWING WITHOUT THE WRITTEN PERMISSION OF WINSLOW ARCHITECTS INC. IS PROHIBITED. VIOLATORS WILL BE PROSECUTED TO THE FULL EXTENT OF THE LAW.

© 2019 WINSLOW ARCHITECTS, INC.

Project number:

16-515

Sheet:

S-401-AB

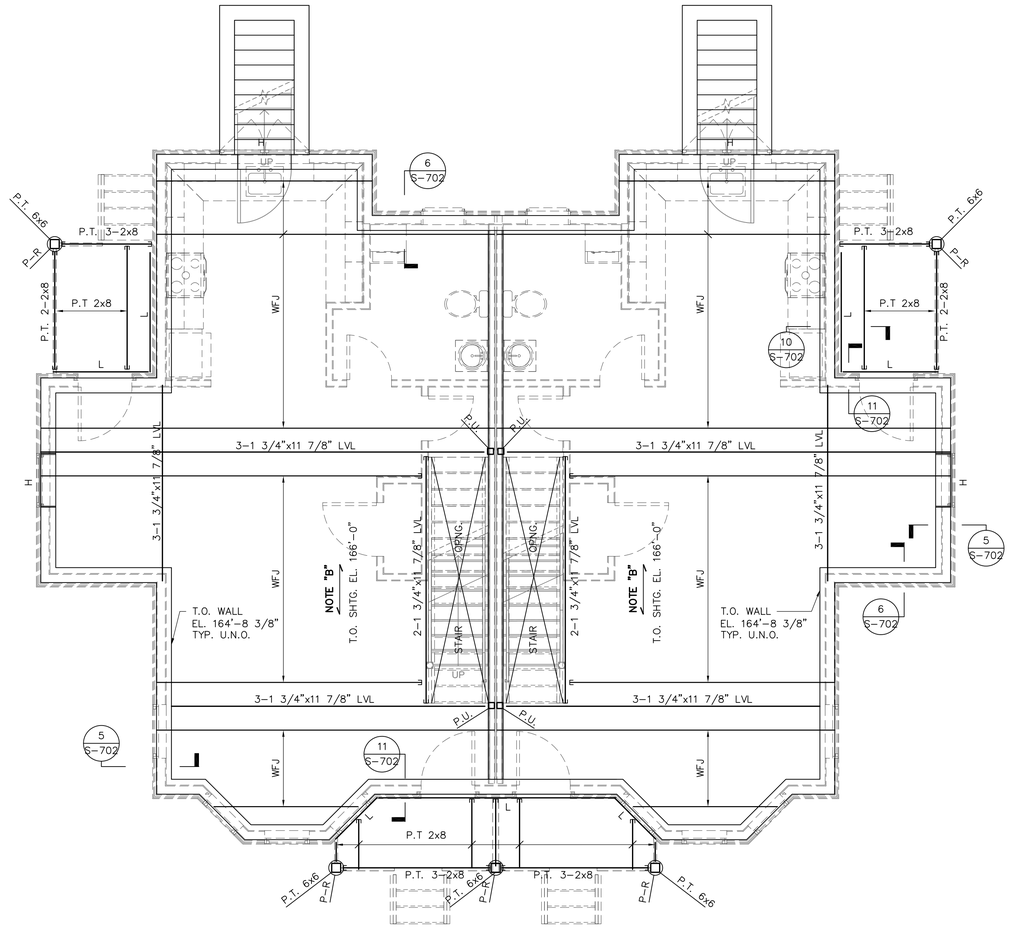

BUILDING C

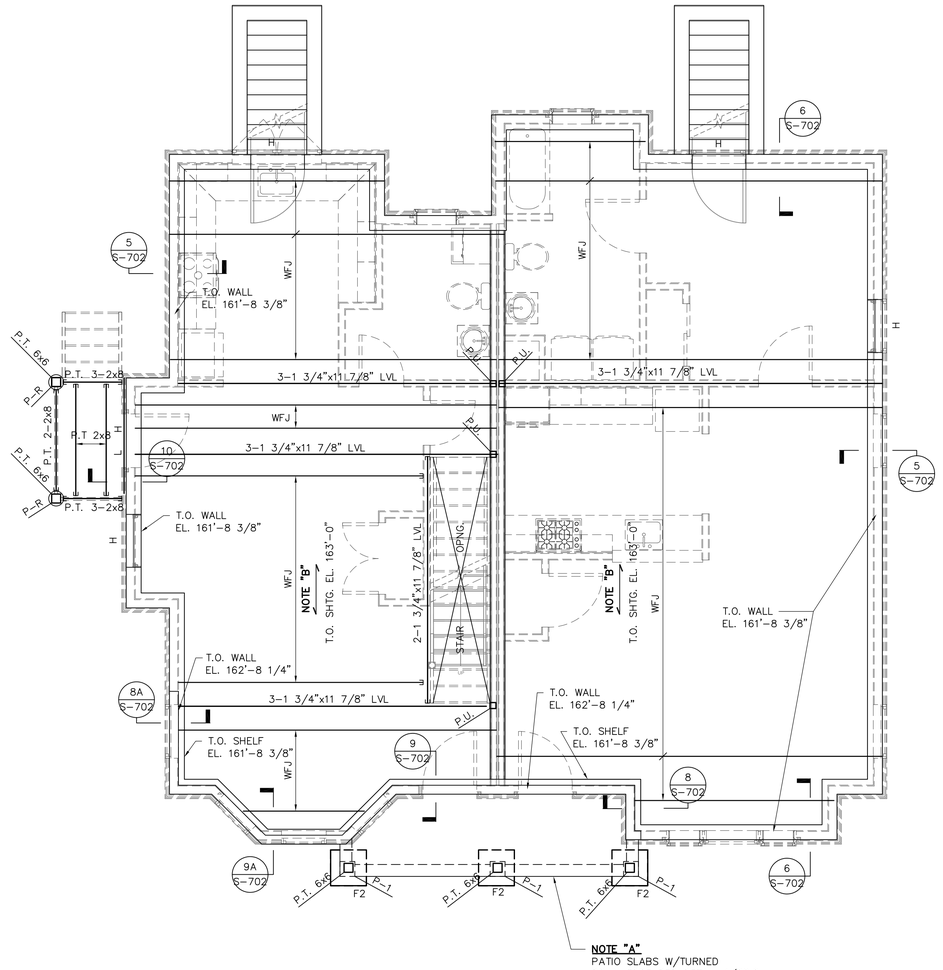

BUILDING D

FIRST FLOOR FRAMING PLANS

SCALE: 1/4" = 1'-0"

NOTE:
REFER TO DRAWINGS S-300 AND S-400 FOR ADDITIONAL REQUIREMENTS.

Date issued:

07-15-19

WINSLOW ARCHITECTS INC

89 MASSACHUSETTS AVE.
ARLINGTON, MA 02474

P: 781 648.6600
F: 781 648.6601

www.winslowarchitects.com

Owner/Developer:

-

52 Chauncy Street
Boston, MA 02111

Structural Engineer:

DMBC STRUCTURAL ENGINEERS
DM BERG CONSULTANTS, P.C.
SERVING THE INDUSTRY SINCE 1965
100 CRESCENT ROAD, SUITE 1A
NEEDHAM, MASSACHUSETTS 02494-1657
P 781.444.5156 F 781.444.5157
WWW.DMBERG.COM

DMBC Project # 19057

Project:

MEDFIELD GREEN

Drawing:

BUILDINGS C & D FIRST FLOOR FRAMING PLANS

Revisions:

No.	Description	Date
	FOUNDATIONS	7/15/19

Stamp:

COMMONWEALTH OF MASSACHUSETTS
WILLIAM H. BARRY
STRUCTURAL
No. 40985
REGISTERED PROFESSIONAL ENGINEER

William H. Barry

ANY REPRODUCTION, POSSESSION OR USE OF THIS DRAWING WITHOUT THE WRITTEN PERMISSION OF WINSLOW ARCHITECTS INC. IS PROHIBITED. VIOLATORS WILL BE PROSECUTED TO THE FULL EXTENT OF THE LAW.

© 2019 WINSLOW ARCHITECTS, INC.

Project number:

16-515

Sheet:

S-401-CD

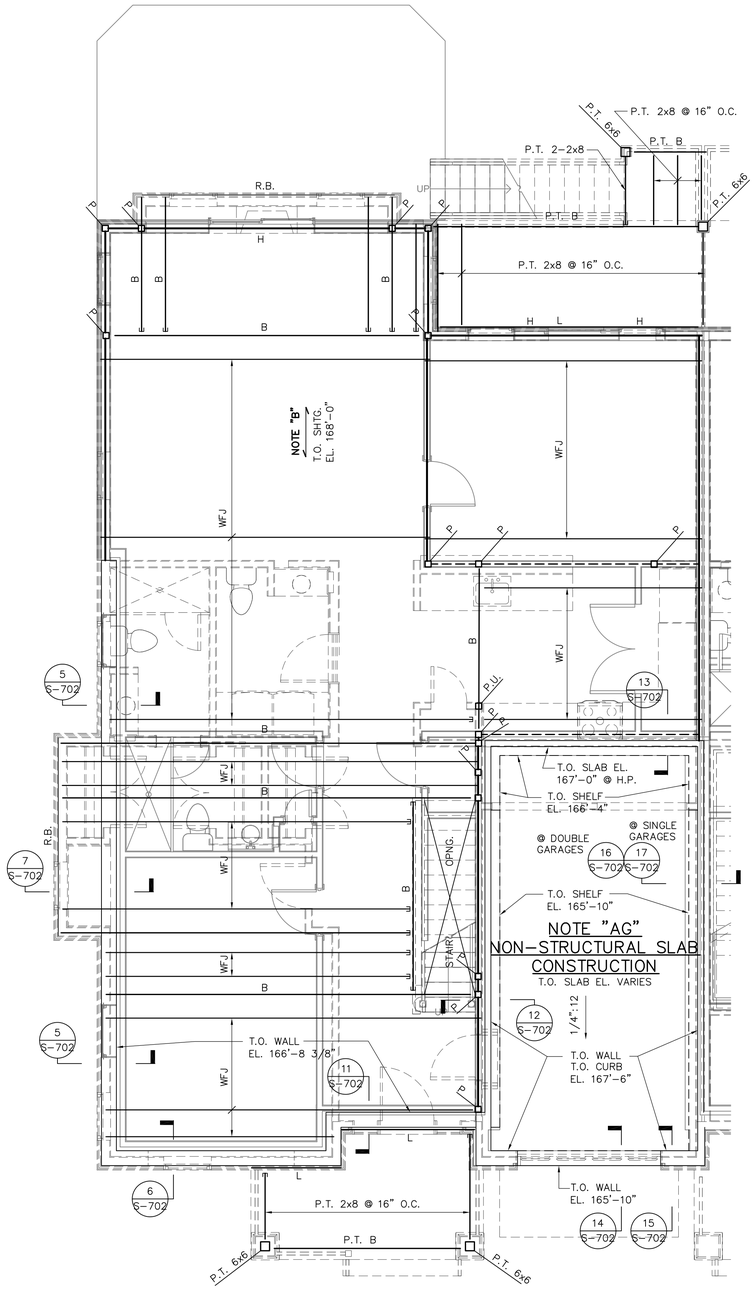

UNIT TYPE A
FIRST FLOOR FRAMING PLAN
SCALE: 1/4" = 1'–0"
UNIT TYPE A1 SIMILAR

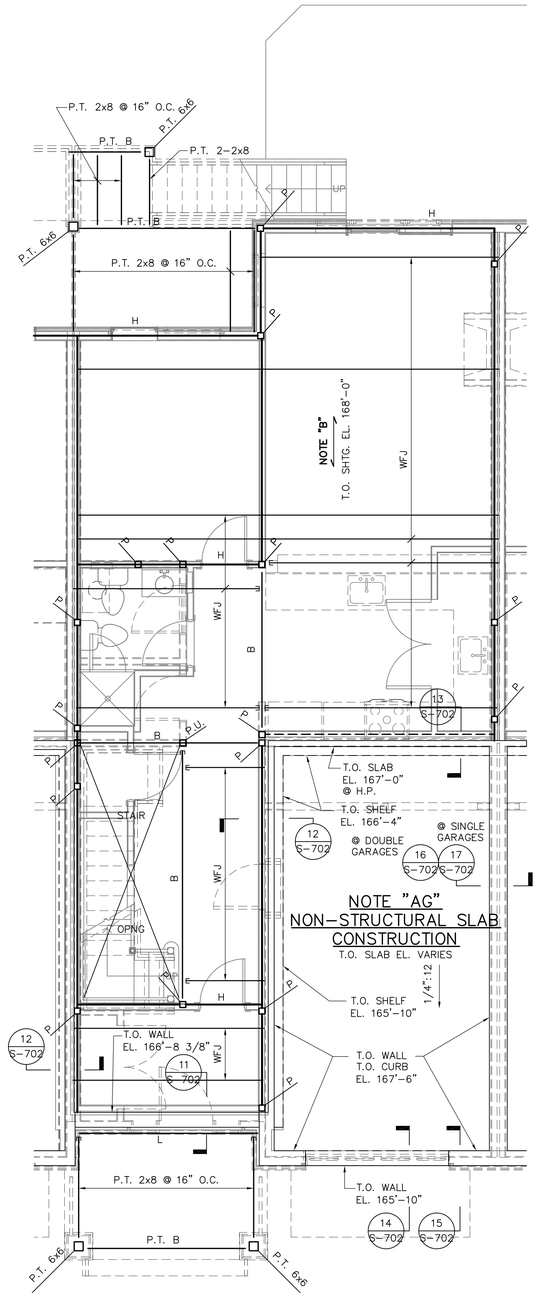

UNIT TYPE B
FIRST FLOOR FRAMING PLAN
SCALE: 1/4" = 1'–0"
UNIT TYPES B1 AND B2 SIMILAR

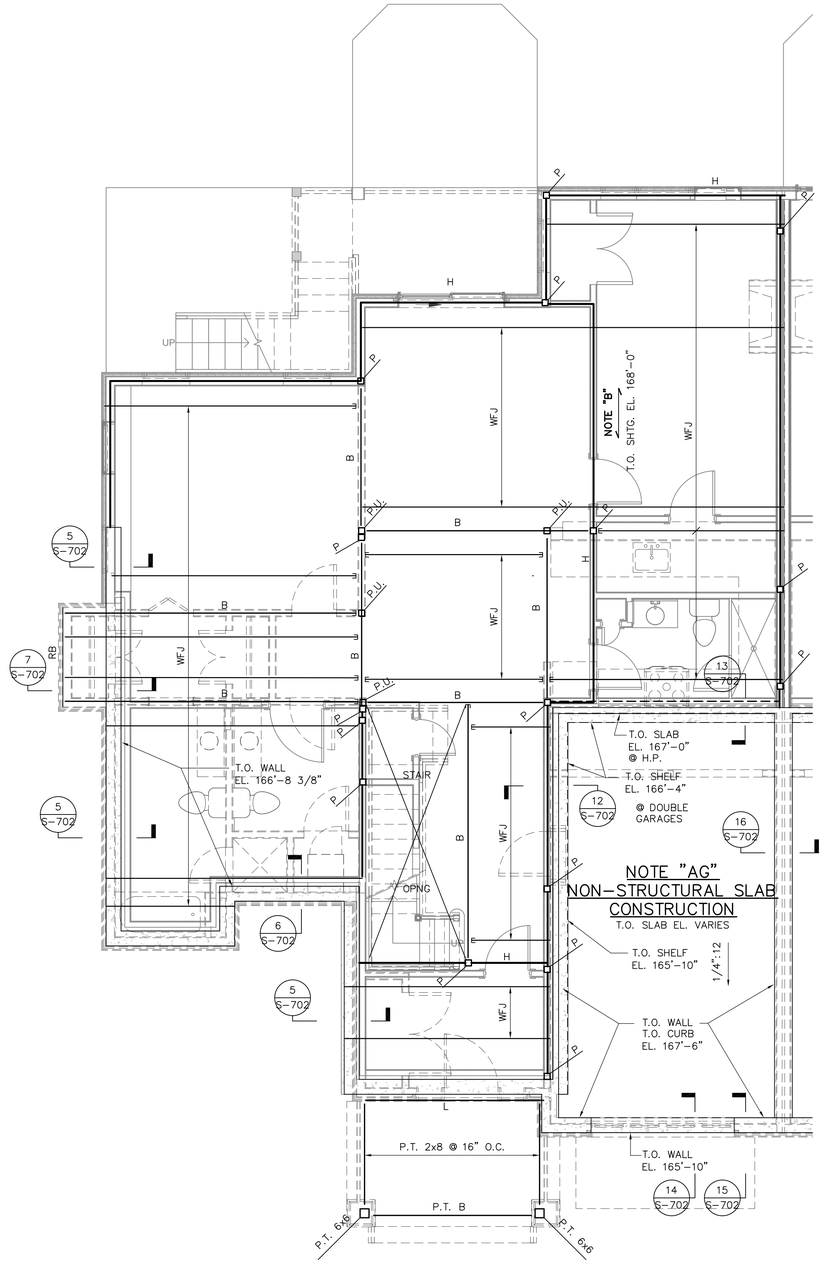

UNIT TYPE B3
FIRST FLOOR FRAMING PLAN
SCALE: 1/4" = 1'–0"

NOTE:
REFER TO DRAWINGS S–300 AND S–400 FOR ADDITIONAL REQUIREMENTS.

Date issued:

07-15-19

WINSLOW ARCHITECTS INC

89 MASSACHUSETTS AVE.
ARLINGTON, MA 02474

P: 781 648.6600
F: 781 648.6601

www.winslowarchitects.com

Owner/Developer:

-

52 Chauncy Street
Boston, MA 02111

Structural Engineer:

DMBC STRUCTURAL ENGINEERS
DM BERG CONSULTANTS, P.C.
SERVING THE INDUSTRY SINCE 1960
100 Crescent Road, Suite 1A
Needham, Massachusetts 02494-1457
P 781.444.5150 F 781.444.5157
www.dmberg.com

DMBC Project # 19057

Project:

MEDFIELD GREEN

Drawing:

UNIT TYPE A, B AND B3 FIRST FLOOR FRAMING PLANS

Revisions:

No.	Description	Date
	FOUNDATIONS	7/15/19

Stamp:

COMMONWEALTH OF MASSACHUSETTS
WILLIAM H. BARRY
STRUCTURAL
No. 40986
REGISTERED PROFESSIONAL ENGINEER

ANY REPRODUCTION, POSSESSION OR USE OF THIS DRAWING WITHOUT THE WRITTEN PERMISSION OF WINSLOW ARCHITECTS INC. IS PROHIBITED. VIOLATORS WILL BE PROSECUTED TO THE FULL EXTENT OF THE LAW.

© 2019 WINSLOW ARCHITECTS, INC.

Project number:

16-515

Sheet:

S-600

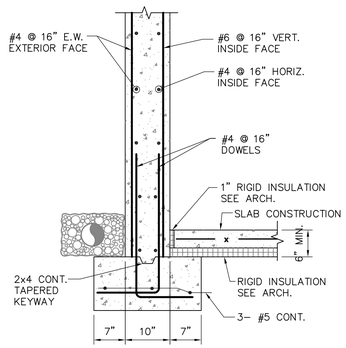

SECTION 1
3/4" = 1'–0"

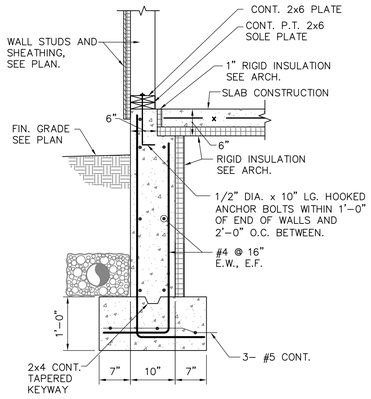

SECTION 2
3/4" = 1'–0"

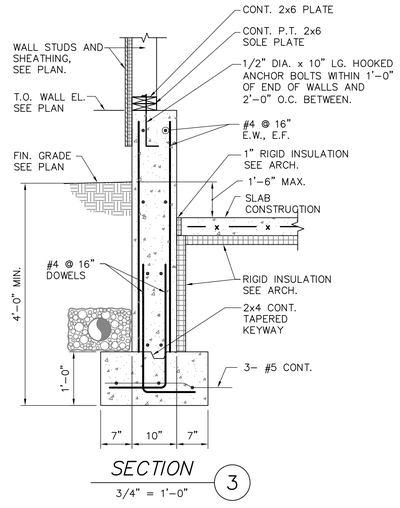

SECTION 3
3/4" = 1'–0"

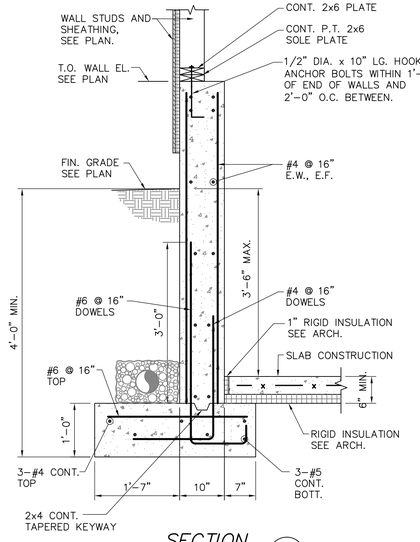

SECTION 4
3/4" = 1'–0"

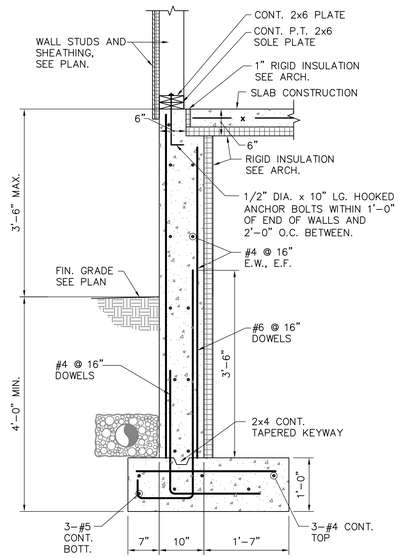

SECTION 5
3/4" = 1'–0"

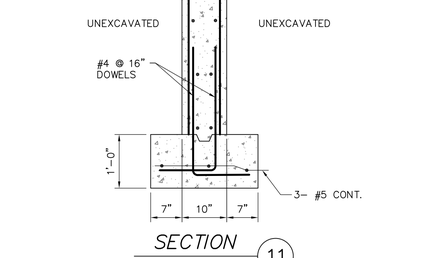

SECTION 6
3/4" = 1'–0"

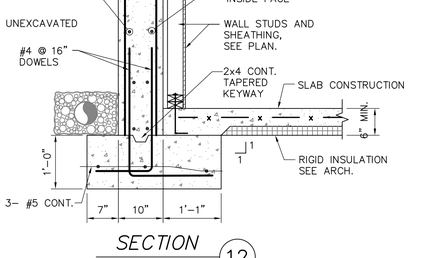

SECTION 6A
3/4" = 1'–0"

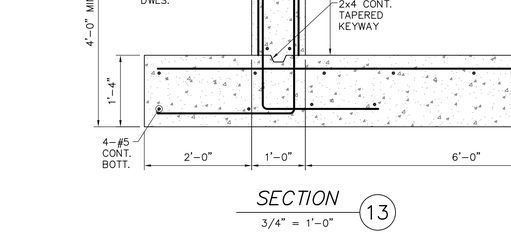

SECTION 7
3/4" = 1'–0"

SECTION 8
3/4" = 1'–0"

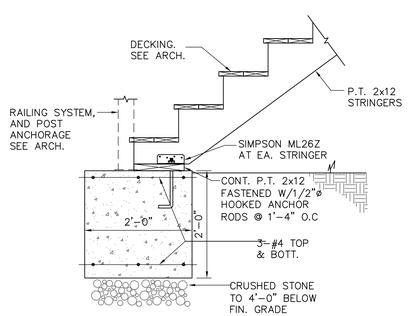

SECTION 9
3/4" = 1'–0"

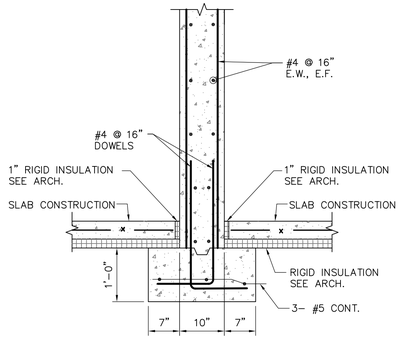

SECTION 10
3/4" = 1'–0"

SECTION 11
3/4" = 1'–0"

SECTION 12
3/4" = 1'–0"

SECTION 13
3/4" = 1'–0"

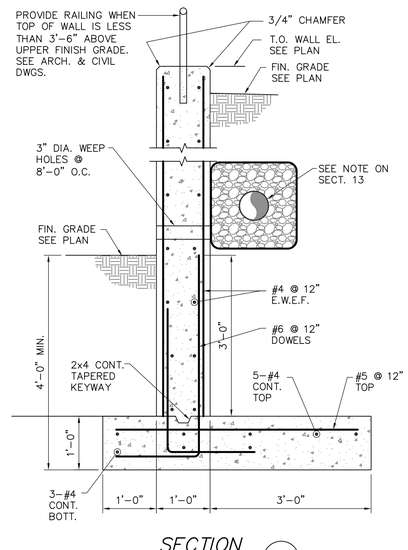

SECTION 14
3/4" = 1'–0"

WINSLOW ARCHITECTS INC

89 MASSACHUSETTS AVE.
ARLINGTON, MA 02474

P: 781 648.6600
F: 781 648.6601

www.winslowarchitects.com

Owner/Developer:

-

52 Chauncy Street
Boston, MA 02111

Structural Engineer:

DM BERG CONSULTANTS, P.C.
STRUCTURAL ENGINEERS
SERVING THE INDUSTRY SINCE 1960
100 Crescent Road, Suite 1A
Needham, Massachusetts 02494-1457
P 781.444.5150 F 781.444.5157
E info@dmbergpc.com

DMBC Project # 19057

Project:

MEDFIELD GREEN

Drawing:

FOUNDATION SECTIONS AND DETAILS

Revisions:

No.	Description	Date
	FOUNDATIONS	7/15/19

Stamp:

COMMONWEALTH OF MASSACHUSETTS
WILLIAM H. BARRY
STRUCTURAL
No. 40985
REGISTERED
PROFESSIONAL ENGINEER

ANY REPRODUCTION, POSSESSION OR USE OF THIS DRAWING WITHOUT THE WRITTEN PERMISSION OF WINSLOW ARCHITECTS INC. IS PROHIBITED. VIOLATORS WILL BE PROSECUTED TO THE FULL EXTENT OF THE LAW.

© 2019 WINSLOW ARCHITECTS, INC.

Project number:

16-515

Sheet:

S-701

Date issued:

07-15-19

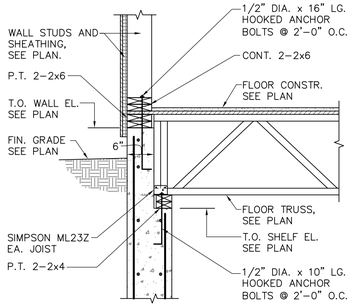

SECTION 1
3/4" = 1'-0"

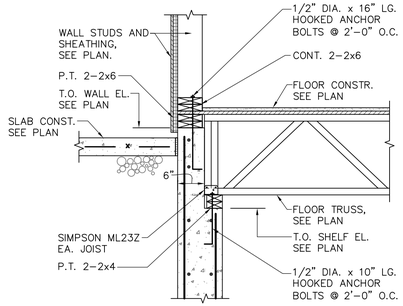

SECTION 2
3/4" = 1'-0"

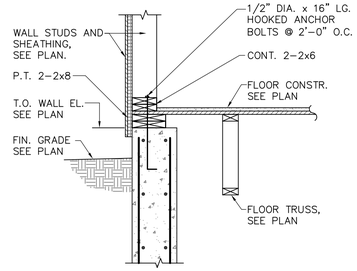

SECTION 3
3/4" = 1'-0"

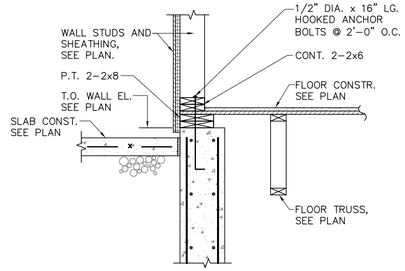

SECTION 4
3/4" = 1'-0"

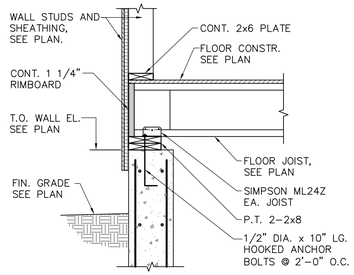

SECTION 5
3/4" = 1'-0"

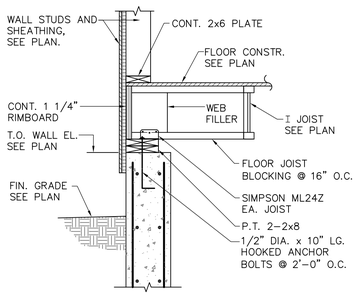

SECTION 6
3/4" = 1'-0"

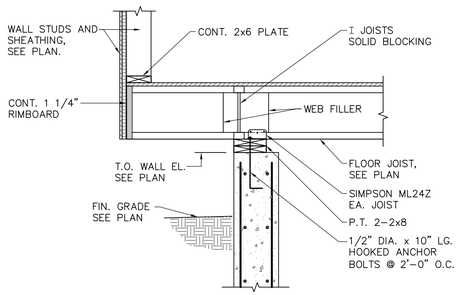

SECTION 7
3/4" = 1'-0"

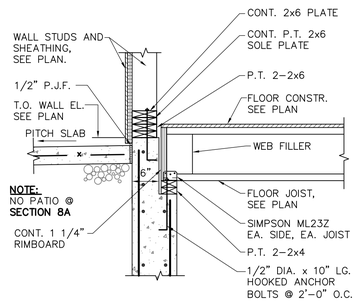

SECTION 8 8A
3/4" = 1'-0"

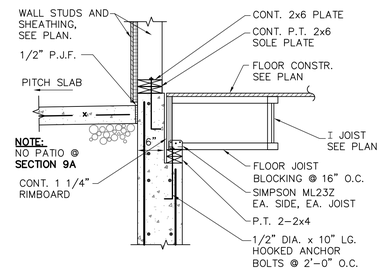

SECTION 9 9A
3/4" = 1'-0"

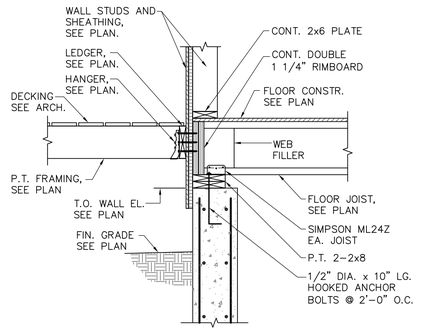

SECTION 10
3/4" = 1'-0"

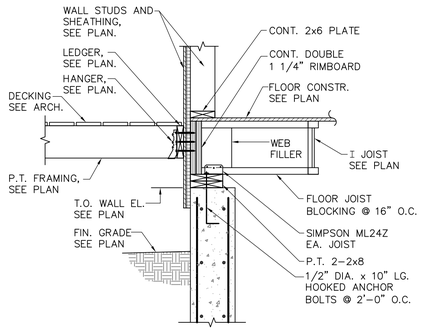

SECTION 11
3/4" = 1'-0"

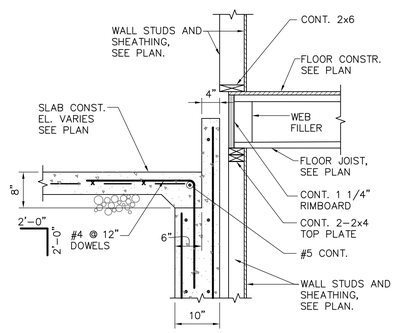

SECTION 12
3/4" = 1'-0"

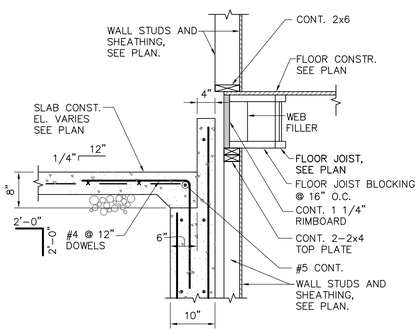

SECTION 13
3/4" = 1'-0"

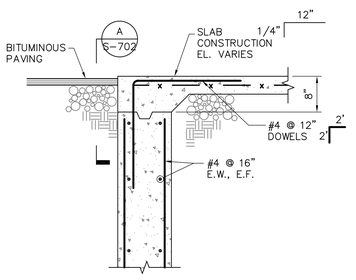

SECTION 14
3/4" = 1'-0"

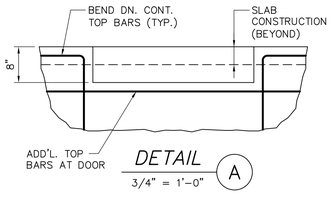

DETAIL A
3/4" = 1'-0"

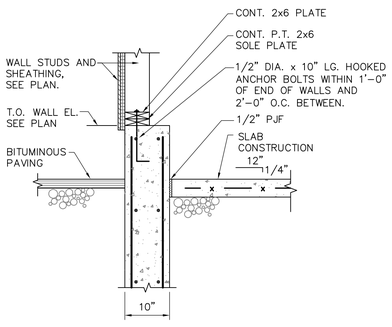

SECTION 15
3/4" = 1'-0"

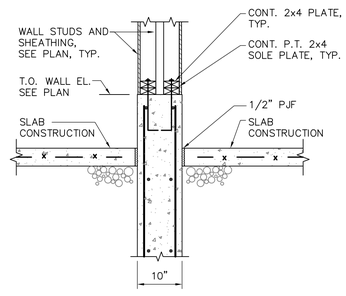

SECTION 16
3/4" = 1'-0"

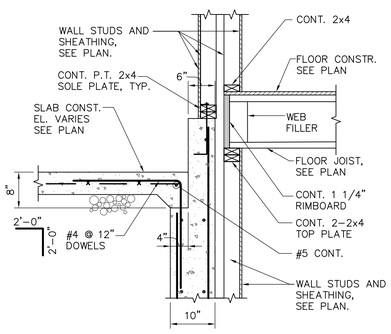

SECTION 17
3/4" = 1'-0"

Date issued:

07-15-19

WINSLOW ARCHITECTS INC

89 MASSACHUSETTS AVE.
ARLINGTON, MA 02474

P: 781 648.6600
F: 781 648.6601

www.winslowarchitects.com

Owner/Developer:

-

52 Chauncy Street
Boston, MA 02111

Structural Engineer:

DMBC
STRUCTURAL ENGINEERS
DM BERG CONSULTANTS, P.C.
SERVING THE INDUSTRY SINCE 1960
100 Crescent Road, Suite 1A
Needham, Massachusetts 02494-1457
P 781.444.5150 F 781.444.5157
www.dmberg.com

DMBC Project # 19057

Project:

MEDFIELD GREEN

Drawing:

FOUNDATION AND FIRST FLOOR SECTIONS AND DETAILS

Revisions:

No.	Description	Date
	FOUNDATIONS	7/15/19

Stamp:

COMMONWEALTH OF MASSACHUSETTS
WILLIAM H. BARRY
STRUCTURAL
No. 40985
REGISTERED PROFESSIONAL ENGINEER

ANY REPRODUCTION, POSSESSION OR USE OF THIS DRAWING WITHOUT THE WRITTEN PERMISSION OF WINSLOW ARCHITECTS INC. IS PROHIBITED. VIOLATORS WILL BE PROSECUTED TO THE FULL EXTENT OF THE LAW.

© 2019 WINSLOW ARCHITECTS, INC.

Project number:

16-515

Sheet:

S-702

PLUMBING FIXTURE CONNECTION SCHEDULE

DESIGNATION	FIXTURE DESCRIPTION	CONNECTION SIZE CW	HW	S/W	V	DESIGNATION
P-1	WATER CLOSET	1/2"	-	3"	2"	AMERICAN STANDARD MODEL 3378.128ST COMPLETE WITH CLOSED FRONT SEAT, COVER, SUPPLY WITH STOP AND WAX RING.
P-1A	WATER CLOSET	1/2"	-	3"	2"	AMERICAN STANDARD MODEL 3378.128ST COMPLETE WITH CLOSED FRONT SEAT, COVER, SUPPLY WITH STOP AND WAX RING.
P-1B	WATER CLOSET (MAINTENANCE RESTROOM)	1/2"	-	3"	2"	AMERICAN STANDARD MODEL 2891.128 LESS SEAT/COVER COMPLETE WITH CHURCH MODEL 95SSCT SEAT, SUPPLY WITH STOP AND WAX RING.
P-1C	WATER CLOSET (POOL RESTROOMS)	1/2"	-	3"	2"	AMERICAN STANDARD MODEL 2891.128 LESS SEAT/COVER COMPLETE WITH CHURCH MODEL 95SSCT SEAT, SUPPLY WITH STOP AND WAX RING.
P-2	LAVATORY	1/2"	1/2"	1 1/2"	1 1/2"	SINK COMPLETE WITH WITH POP UP WASTE ASSEMBLY AND SUPPLIES WITH STOPS.
P-2A	LAVATORY (ACCESSIBLE)	1/2"	1/2"	1 1/2"	1 1/2"	SINK COMPLETE WITH SUPPLIES WITH STOPS AND OFFSET P-TRAP. PROVIDE TRUEBRO PROTECTIVE WRAP.
P-2B	LAVATORY (MAINTENANCE RESTROOM)	1/2"	1/2"	1 1/2"	1 1/2"	SINK COMPLETE WITH SUPPLIES WITH STOPS AND OFFSET P-TRAP. PROVIDE TRUEBRO PROTECTIVE WRAP AND .5 GPM FLOW RESTRICTOR.
P-2C	LAVATORY (POOL RESTROOMS)	1/2"	1/2"	1 1/2"	1 1/2"	COMPLETE WITH SUPPLIES WITH STOPS AND OFFSET P-TRAP. PROVIDE TRUEBRO PROTECTIVE WRAP AND .5 GPM FLOW RESTRICTOR.
P-3	TUB/SHOWER	1/2"	1/2"	2"	2"	TUB COMPLETE WITH TUB/SHOWER VALVE/TRIM.
P-3A	TUB/SHOWER (ACCESSIBLE)	1/2"	1/2"	2"	2"	TUB COMPLETE WITH TUB/SHOWER VALVE/TRIM. CONTROL VALVE AND DIVERTER TO BE MOUNTED ON LONG WALL. INSTALL TUB PER ADA/MAAB REQUIREMENTS.
P-3B	SHOWER	1/2"	1/2"	2"	2"	SHOWER BASE COMPLETE WITH SHOWER VALVE AND TRIM.
P-3C	SHOWER (ACCESSIBLE)	1/2"	1/2"	2"	2"	SHOWER BASE COMPLETE WITH SHOWER VALVE AND TRIM. CONTROL VALVE AND DIVERTER TO BE MOUNTED ON LONG WALL.
P-4	KITCHEN SINK •	1/2"	1/2"	2"	2"	WITH GRID STRAINER COMPLETE WITH WITH SUPPLIES AND STOPS, WASTER
P-4A	KITCHEN SINK • (ACCESSIBLE)	1/2"	1/2"	2"	2"	ELKAY MODEL ELUHAD281645 UNDERMOUNT SINK WITH GRID STRAINER COMPLETE WITH WITH SUPPLIES AND STOPS, WASTE DISPOSER•, DISHWASHER CONNECTION, AND OFFSET P-TRAP. PROVIDE TRUEBRO PROTECTIVE WRAP.
P-4B	KITCHEN SINK • (RESOURCE ROOM)	1/2"	1/2"	2"	2"	ELKAY MODEL LRAD252255 SINGLE HOLE TOP MOUNT SINK WITH GRID STRAINER COMPLETE WITH FAUCET WITH SUPPLIES AND STOPS, WASTE DISPOSER•, DISHWASHER CONNECTION, AND OFFSET P-TRAP. PROVIDE TRUEBRO PROTECTIVE WRAP.
P-4C	KITCHEN SINK • (ENTERTAINING KITCHEN)	1/2"	1/2"	2"	2"	
P-4D	KITCHEN SINK • (WATER STATION)	1/2"	1/2"	2"	2"	
P-5	WASHING MACHINE CONNECTION	1/2"	1/2"	2"	2"	OATEY MODEL 38652 COMPLETE WITH 1/4" TURN BRASS BALL VALVE - CPVC PACK WITH WATER HAMMER OPTION AND DRAIN PAN
P-6	ICE MAKER BOX	1/2"	-	-	-	OATEY MODEL 38680 COMPLETE WITH 1/4" TURN BRASS BALL VALVE - CPVC - STANDARD PACK
P-7	MOP RECEPTOR	1/2"	1/2"	3"	2"	FIAT MODEL MSB 2424 COMPLETE WITH WALL GUARDS, RIM GUARDS AND 820-AA FAUCET WITH INTEGRAL VACUUM BREAKER
P-8	WATERCOOLER W/ BOTTLE FILLING STATION	1/2"	-	2"	2"	ELKAY MODEL EZSTLBWS
P-9	URINAL (POOL RESTROOMS)	1/2"	-	2"	2"	TOTO MODEL UT105U
P-10	DOG WASH	3/4"	-	2"	2"	PET EDGE MODEL ZT9043
WH	WALL HYDRANT	3/4"	-	-	-	MURDOCK MODEL 3519 ANTI-SIPHON FREEZELESS MODEL 65 WITH LOOSE KEY STOP
HB	HOSE BIB	3/4"	-	-	-	MURDOCK MODEL M-3619 WITH INTEGRAL VACUUM BREAKER AND LOOSE KEY STOP

NOTE: "AS IT APPLIES TO PLUMBING AND GAS WORK IN MASSACHUSETTS, THE FOLLOWING IS APPLICABLE: FOR THE INSTALLATION OF THESE FIXTURES AND COMPONENTS IN MASSACHUSETTS, REFER TO 248 CMR MASSACHUSETTS STATE PLUMBING AND FUEL CODE, SECTION 3.04 (1) WHICH STATES, "BOARD REQUIRED PRODUCT-ACCEPTED, ONLY PRODUCT AND MATERIAL LISTED THAT HAS BEEN LISTED BY THE BOARD AS PRODUCT-ACCEPTED SHALL BE USED FOR PLUMBING AND GAS FITTING WORK PERFORMED IN THE COMMONWEALTH ND GOVERENED BY MGL CHAPTER 142 AND 248 CMR"

ELECTRIC WATER HEATER SCHEDULE

SYMBOL	STORAGE GALS	RECOVERY GPH	RECOVERY DEG RISE	NUMBER ELEMENTS	ELECTRICAL KW	ELECTRICAL V	ELECTRICAL PH	ELECTRICAL HZ	TEMP SETTING	MANUFACTURER & MODEL
EWH-1	20	25	90 F	1	6	208	SINGLE	60	120 F	STATE WATER HEATER MODEL PCE 20 10MSA COMPLETE WITH SAFE WASTE PAN, TEMPERING VALVE AND EXPANSION TANK.
EWH-2	50	21	90 F	2	(2)4.5	208	THREE	60	120 F	STATE WATER HEATER MODEL ENG 50 DOUBS COMPLETE WITH SAFE WASTE PAN, TEMPERING VALVE AND EXPANSION TANK.
EWH-3	40	24	90°F	1	6	208	SINGLE	60	120 F	STATE WATER HEATER MODEL PCE 40 20LSA COMPLETE WITH SAFE WASTE PAN, TEMPERING VALVE AND EXPANSION TANK.

DRAIN SCHEDULE

SYMBOL	TYPE	MFG.	MODEL	OUTLET	STRAINER	LOCATION	REMARKS
FD-A	FLOOR DRAIN	JR SMITH	2010 A	NO HUB	NICKEL BRONZE	TOILET ROOM/ LAUNDRY	BRONZE BODY W/ TRAP PRIMER CONNECTIONS
FD-B	FLOOR DRAIN	JR SMITH	2230C	CAULK	CAST IRON	MECHANICAL ROOM	SEDIMENT BUCKET & TRAP PRIMER CONNECTIONS
RD-A	ROOF DRAIN	JR SMITH	1010Y ERC-CID	NO HUB	CAST IRON	ROOF	EXTENSION, SUMP RECEIVER, UNDERDECK CLAMP
RD-B	OVERFLOW ROOF DRAIN	JR SMITH	1070Y-ERC-CID	NO HUB	CAST IRON	ROOF	EXTENSION, SUMP RECEIVER, UNDERDECK CLAMP
RD-C	CANOPY ROOF DRAIN	JR SMITH	1480	NO HUB	CAST IRON	CANOPY	EXTENSION, SUMP RECEIVER, UNDERDECK CLAMP
GD-A	GARAGE DRAIN	JR SMITH	2142C-M	CAULK	CAST IRON	GARAGE	SEDIMENT BUCKET & TRAP PRIMER CONNECTIONS
CYD-A	COURT YARD DRAIN	JR SMITH	1915	CAULK	CAST IRON	COURTYARD	EXTENSION, SUMP RECEIVER, UNDERDECK CLAMP
CYD-B	COURT YARD DRAIN	JR SMITH	1920	CAULK	CAST IRON	COURTYARD	EXTENSION, SUMP RECEIVER, UNDERDECK CLAMP
TP-1	TRAP PRIMER	PPP	PRO1-500				

NOTE:
1. BEFORE SETTING DRAINS, OBTAIN EXACT INFORMATION RELATIVE TO FINISH FLOOR LEVEL AT TOP OF DRAINS.
2. DRAIN SIZES ARE INDICATED ON THE DRAWINGS.
3. ALL FLOOR DRAINS SHALL INCLUDE TRAP PRIMERS AND TRAP GUARDS.

GAS FIRED WATER HEATER SCHEDULE

I.D.	MANUFACTURER	MODEL	GALS.	G.P.M	Δ TEMP.	GAS INPUT (CFH)	VOLTS	PHASE	HZ	REMARKS
GWH-1	NAVIEN	NPE-240S	-	3.4	90°	199	120	1	60	PROVIDE COMPLETE SYSTEM WITH 3"PVC EXHAUST PIPING AND 3"PVC COMBUSTION AIR INTAKE PIPING. INSTALLATION SHALL INCLUDE AMTROL ST-5 EXPANSION TANK, POWERS LFM 490 TEMPERING VALVE, VENTED THRU THE SIDEWALL WITH CONCENTRIC VENT TERMINATION, PLUMB EASY VALVE SET AND CONDENSATE WASTE NEUTRALIZATION KIT. INSTALL PER MANUFACTURER'S REQUIREMENTS FOR ARRANGEMENT SERVING BOTH DOMESTIC HOT WATER AND DWELLING UNIT HEATING HOT WATER SUPPLY TO FAN COIL UNIT.

NOTES: 1. EXTEND ALL WATER HEATER VENTING THROUGH SIDEWALL PER MANUFACTURES SPECIFICATIONS. 2. UNITS TO BE SET DOMESTIC HOT WATER PRIORITY. 3. VENT PIPING TO BE PITCHED AT 1/4" PER FOOT AS PER MANUFACTURER REQUIREMENTS. IF PITCH CAN NOT BE MET CONTRACTOR TO RUN VENTING THRU ROOF.

PLUMBING LEGEND

SYMBOL	ABBREVIATION	DESCRIPTION
		ABOVE FLOOR PIPING (INDICATED AS SINGLE LINEWORK)
		BELOW FLOOR PIPING (INDICATED AS DOUBLE LINEWORK)
	CW	COLD WATER PIPING
HOUSE	CW	COLD WATER PIPING (HOUSE METER)
	HW	HOT WATER PIPING
	S/W	SANITARY DRAINAGE (SOIL/WASTE) PIPING
	V	SANITARY VENT PIPING
CWW	CWW	CLEAR WATER WASTE PIPING
CWWV	CWWV	CLEAR WATER WASTE VENT PIPING
	RL	RAIN LEADER PIPING
SRL	SRL	SECONDARY RAIN LEADER PIPING
G	G	GAS (NATURAL) PIPING
G(HOUSE)	G(HOUSE)	GAS (NATURAL) HOUSE PIPING
LW	LW	LAUNDRY WASTE PIPING
LV	LV	LAUNDRY VENT PIPING
	CWR	COLD WATER RISER
	SS	SOIL STACK
	WS	SANITARY WASTE STACK
	VS	SANITARY VENT STACK
	LWS	LAUNDRY WASTE STACK
	LVS	LAUNDRY VENT STACK
	CWWS	CLEAR WATER WASTE STACK
	UP	UP (PENETRATES LEVEL ABOVE)
		RISE (BUT DOES NOT PENETRATE LEVEL ABOVE)
	DN	DOWN (PENETRATES LEVEL BELOW)
		DROP (BUT DOES NOT PENETRATE LEVEL BELOW)
		DIRECTION OF FLOW
.01		DIRECTION & DESIGNATION OF SLOPE (IN FT/FT)
		SHUTOFF VALVE
	PRV	PRESSURE REDUCING VALVE
	CV	CHECK VALVE
	DV	DRAIN VALVE WITH HOSE THREADS

SYMBOL	ABBREVIATION	DESCRIPTION
		NATURAL GAS SHUTOFF VALVE
	PG	PRESSURE GAUGE
	SA/HA	SHOCK ABSORBER/HAMMER ARRESTOR
	EXPJ	EXPANSION JOINT
	CO	CLEANOUT
	COT	CLEANOUT TEE
	WCO	WALL CLEANOUT
	FCO	FLOOR CLEANOUT
	FD	FLOOR DRAIN
	GD	ROOF DRAIN
	RD	ROOF DRAIN
	TD	TRENCH DRAIN
	HB	HOSE BIBB
	WH	WALL HYDRANT
	AP	ACCESS PANEL
	INV	INVERT ELEVATION
	W&T	WASTE & TRAP
	VIV	VALVE IN VERTICAL
	OED	OPEN END DRAIN
	VTR	VENT THRU ROOF
		CAPPED CONNECTION
	UN	UNION
	ST	STRAINER
	SL	WATER TIGHT SLEEVE
	P-	PLUMBING FIXTURE DESIGNATION
	WM	WATER METER
	GM	GAS METER
	LPC	LIMIT OF PLUMBING CONTRACT
	CWWVTR	CLEAR WATER WASTE VENT THRU ROOF
	SMH	SANITARY MANHOLE (BY OTHERS)
	DMH	DRAINAGE MANHOLE (BY OTHERS)
		RISER DESIGNATIONS / ROOM CALLOUTS

PLUMBING GENERAL NOTES:

1. THE WORK CONSISTS OF FURNISHING ALL LABOR AND MATERIALS NECESSARY TO INSTALL A COMPLETE AND READY FOR CONTINUOUS OPERATION PLUMBING SYSTEM INCLUDING BUT NOT LIMITED TO APPARATUS AND EQUIPMENT FOR THIS PROJECT.

2. ALL EQUIPMENT AND MATERIALS FURNISHED UNDER THE PLUMBING SUB CONTRACT INCLUDING LABOR AND TESTING PERFORMED HEREIN SHALL BE IN ACCORDANCE WITH THE STATE BUILDING CODE, FUEL GAS AND PLUMBING CODE, ALL LOCAL CODES AND REGULATIONS, NATIONAL FIRE PROTECTION ASSOCIATION, INSURANCE REGULATIONS AND REQUIREMENTS GOVERNING SUCH WORK.

3. ANY AND ALL PERMITS REQUIRED FOR INSTALLATION OF ANY MATERIALS SHALL BE OBTAINED AS PART OF THE WORK OF THE DRAWINGS AND SPECIFICATIONS INCLUDING ALL FEES AND EXPENSES INCURRED.

4. REFER TO ARCHITECTURAL DRAWINGS FOR EXACT LOCATION AND MOUNTING HEIGHTS OF ALL PLUMBING FIXTURES AND EQUIPMENT.

5. MISCELLANEOUS DISCREPANCIES OR OMISSIONS WHICH MIGHT APPEAR ON THE PLANS OR SPECIFICATIONS WILL NOT RELIEVE THE PLUMBING SUB CONTRACTOR OF CODE COMPLIANCE.

6. PROVIDE FIRE STOPPING OF MATERIAL OR COMBINATION OF MATERIALS, TO RETAIN THE INTEGRITY OF TIME RATED CONSTRUCTION BY MAINTAINING AN EFFECTIVE BARRIER AGAINST THE SPREAD OF FLAME, SMOKE AND GASES. IT SHALL BE USED IN ALL PIPING AND HANGER PENETRATIONS THROUGH FLOOR SLABS, TIME RATED PARTITIONS AND FIRE WALLS.

7. FIRE STOPPING MATERIAL SHALL BE ASBESTOS-FREE AND IN COMPLIANCE WITH ASTM E814 AND UL 1479. ALL METERIAL SHALL MEET THE REQUIREMENTS OF NFPA 101 SAFETY CODE AND NFPA 70 NATIONAL ELECTRIC CODE.

8. USE COPPER TUBING ON OUTLETS OF ALL SHOWER/TUB VALVES. NO OTHER MATERIAL WILL BE ACCEPTED.

9. PROVIDE 1" INSULATION ON ALL ROOF DRAIN BODIES AND HORIZONTAL STORM DRAINAGE PIPING.

10. EXPANSION FITTINGS ARE REQUIRED ON ALL PVC PIPING BETWEEN EVERY OTHER BRANCH INTERVAL AND ON HORIZONTAL RUNS EXCEEDING TWENTY (20) FEET. ALL HORIZONTAL FITTINGS SHALL BE INSTALLED IN AN ACCESSIBLE LOCATION OR PROVIDED WITH ACCESS PANELS. UNDERGROUND PIPING IS EXCLUDED FROM THIS REQUIREMENT. OFFSETS DO NOT ELIMINATE THE NEED FOR THIS REQUIREMENT. THE LOCATIONS OF ALL EXPANSION FITTINGS SHALL BE CLEARLY AND ACCURATELY SHOWN ON THE AS-BUILT DRAWINGS.

11. PROVIDE VERTICAL CLEANOUT AT THE BASE OF EACH PLUMBING STACK COMPLETE WITH ACCESS COVER.

12. PROVIDE SHUT-OFF & DRAIN VALVES AT BASE OF EACH RISER

13. FREEZE PROTECTION

ALL PIPING SYSTEMS WITHIN THE GARAGE SHALL BE PROTECTED BY ELECTRICALLY CHARGED HEAT TRACING CABLES AND INSULATION FOR ALL VERTICAL AND HORIZONTAL SANITARY WASTE, LAUNDRY WASTE, CLEAR WATER WASTE, STORM DRAINAGE AND WATER PIPING, INCLUDING TRAPS AND FITTINGS. ALL FREEZE PROTECTION COMPONENTS ARE TO BE FURNISHED AND INSTALLED BY THE PLUMBING CONTRACTOR WITH POWER SUPPLY TO BE PROVIDED BY THE ELECTRICAL CONTRACTOR.

14. TOP FLOOR DWELLING UNIT WATER DISTRIBUTION

DOMESTIC COLD WATER AND HOT WATER PIPING SUPPLING DWELLING UNIT PLUMBING FIXTURES AT THE TOP LEVEL SHALL BE DISTRIBUTED ABOVE CEILING OF THE LEVEL BELOW AND EXTEND UP TO THE FIXTURES FROM THE CEILING SPACE BELOW AVOIDING POTENTIAL FREEZING CONDITIONS ABOVE THE CEILING OF THE TOP LEVEL.

KEY NOTES:

1. 4" SOIL STACK & 3" VENT STACK. CONNECT 3"S. FROM BATHROOM GROUP TO SOIL STACK BY WET VENTING OF FIXTURES THROUGH THE LAVATORY. EXTEND 2" V. FROM LAVATORY & CONNECT TO V. STACK 6" ABOVE FLOOD RIM OF LAVATORY. REFER TO BATHROOM GROUP RISER SANITARY DIAGRAMS.
2. 3" WASTE STACK & 2" VENT STACK. CONNECT 2"W. & V. FROM KITCHEN SINK & DISHWASHER ADJACENT STACKS. REFER TO KITCHEN SINK SANITARY RISER DIAGRAMS.
3. LAUNDRY WASTE STACK & 2" LAUNDRY VENT STACK. CONNECT 2"LW. & LV. FROM WASHING MACHINE BOX TO ADJACENT STACKS. REFER TO LAUNDRY WASTE RISER DIAGRAMS.
4. 4" SOIL STACK & 3" VENT STACK. CONNECT 3"S. FROM BATHROOM GROUP TO SOIL STACK BY WET VENTING OF FIXTURES THROUGH THE LAVATORY. PROVIDE 2"FD-A OUTSIDE OF SHOWER AND VENT INDEPENDENTLY. EXTEND VENTS & CONNECT TO V. STACK 6" ABOVE FLOOR RIM OF LAVATORY. REFER TO ACCESSIBLE BATHROOM GROUP SANITARY RISE DIAGRAMS.
5. 3" WASTE STACK & 2" VENT STACK. CONNECT 2"W. & V. FROM KITCHEN SINK & DISHWASHER ADJACENT STACKS VIA BOW VENT. REFER TO KITCHEN SINK SANITARY RISER DIAGRAMS.
6. DOMESTIC COLD WATER RISER LOCATION. REFER TO UNIT PART PLANS FOR ADDITIONAL INFORMATION.
7. CONDENSATE STACK AT HVAC AIR HANDLERS SHALL CONVEY CONDENSATE THRU A FUNNEL CONNECTION AT EACH UNIT TO VERTICAL 2" PVC PIPING & BE HARD-PIPED TO CLEAR WATER WASTE SYSTEM. THIS STACK SHALL BE VENTED THRU THE ROOF. DRAIN TO INCLUDE A BALL FLOAT BACKWATER VALVE. REFER TO RISER DIAGRAMS FOR EACH ARRANGEMENT.
8. PROVIDE 3" WASTE STACK & 2"V. STACK WITH 2" WASTE & TRAP (STANDPIPE DRAIN) FOR COLLECTION OF WATER HEATER CONDENSATE & T&P RELIEF AT EACH WATER HEATER LOCATION. REFER TO RISER DIAGRAMS FOR EACH ARRANGEMENT.
9. EXTEND 3" SOIL PIPING TO BATHROOM GROUP FIXTURES.

GENERAL NOTE: RISER LOCATIONS NEED TO BE COORDINATED WITH UNIT AND AMENITY PLANS

PIPING AND FITTINGS SPECIFICATIONS

A. SERVICE: BELOW GROUND DOMESTIC WATER SERVICE PIPING.
PIPE: PUSH-ON-JOINT DUCTILE IRON PIPE: AWWA C151, WITH PUSH-ON-JOINT BELL AND PLAIN SPIGOT END, OR AS REQUIRED BY THE LOCAL WATER DEPARTMENT/MUNICIPALITY.
FITTINGS: STANDARD-PATTERN, PUSH-ON-JOINT FITTINGS: AWWA C110, DUCTILE OR GRAY IRON. COMPACT-PATTERN, PUSH-ON-JOINT FITTINGS: AWWA C153, DUCTILE IRON.
PIPE JOINT: PUSH-ON-JOINT WITH AWWA C111 RUBBER GASKETS.

B. SERVICE: ABOVE GROUND DOMESTIC WATER PIPING (NON-RESIDENTIAL)
PIPE MATERIAL: TYPE L COPPER TUBING, HARD TEMPER.
FITTING MATERIAL: WROUGHT COPPER OR BRONZE SOLDER JOINTS WITH LEAD FREE SOLDER OR VICTAULIC ROLL GROOVED WROUGHT COPPER FITTINGS, ORPERMANENT PUSH-ON-CONNECT. SOLDERED OR VICTAULIC STYLE 607 COUPLINGS AND STYLE 641 FLANGE ADAPTERS, OR PERMANENT PUSH-ON-CONNECT.
PIPE JOINT: SOLDERED OR VICTAULIC STYLE 607 COUPLINGS AND STYLE 641 FLANGE ADAPTERS, OR PERMANENT PUSH-TO-CONNECT.

C. SERVICE: ABOVE GROUND DOMESTIC WATER PIPING DISTRIBUTION MAINS (3" AND LARGER)
PIPE MATERIAL: SCHEDULE 80 FLOWGUARD GOLD CPVC PIPING INSTALLED IN CORRIDORS WITH SUPPORT SYSTEM PER MANUFACTURER'S LISTING REQUIREMENTS AND ALL APPLICABLE CODE REQUIREMENTS.
FITTING MATERIAL: SCHEDULE 80 FLOWGUARD GOLD CPVC FITTINGS INSTALLED IN CORRIDORS PER LISTING OR SCHEDULE 80 VICTAULIC CPVC GROOVED FITTINGS FOR 2" AND LARGER.

D. SERVICE: ABOVE GROUND DOMESTIC WATER PIPING DISTRIBUTION MAINS, RISERS UP THRU BUILDING TO DWELLING UNIT MECHANICAL CLOSETS AND WITHIN DWELLING UNITS (2 1/2" AND SMALLER).
PIPE MATERIAL: SCHEDULE 40 FLOWGUARD GOLD CPVC PIPING INSTALLED IN CORRIDORS WITH SUPPORT SYSTEM AND STRIKE PLATES PER MANUFACTURER'S LISTING REQUIREMENTS AND ALL APPLICABLE CODE REQUIREMENTS.
FITTING MATERIAL: SCHEDULE 40 FLOWGUARD GOLD CPVC FITTINGS INSTALLED IN CORRIDORS PER LISTING

E. SERVICE: DOMESTIC WATER TO TRAP PRIMER CONNECTIONS BELOW SLAB AND ISLAND KITCHEN SINKS.
PIPE MATERIAL: SOFT-ROLLED TYPE K COPPER (NO FITTINGS ALLOWED BELOW SLAB)

F. SERVICE: ABOVE GROUND SANITARY WASTE AND VENT (NON-RESIDENTIAL).
PIPE MATERIAL: NO-HUB CAST IRON SOIL PIPE CONFORMING TO ASTM A-888 OR DWV WROUGHT COPPER.
FITTING MATERIAL: CAST IRON, CAST BRASS, OR WROUGHT COPPER DRAINAGE FITTINGS.
PIPE JOINT: SCREWED, SOLDERED, OR HEAVY DUTY STEEL 4-BAND HEAVY DUTY COUPLING WITH NEOPRENE GASKETS (EQUAL TO HUSKY 4000 SERIES) CONFORMING TO ASTM C-1277.

G. SERVICE: BELOW GROUND SANITARY WASTE AND VENT (NON-RESIDENTIAL).
PIPE MATERIAL: SERVICE WEIGHT CAST IRON HUB AND SPIGOT SOIL PIPE CONFORMING TO ASTM A-74
FITTING MATERIAL: CAST IRON HUB AND SPIGOT DRAINAGE FITTINGS.
PIPE JOINT: PUSH-ON GASKETED
NOTE: ONCE A COMMERCIAL FIXTURE HAS BEEN ATTACHED TO CAST IRON PIPING, THE BUILDING DRAIN MUST CONTINUE IN CAST IRON FROM THAT CONNECTION TO A POINT 10'-0" BEYOND THE FOUNDATION WALL WITH PVC BRANCHES/BRANCH MAINS CONNECTING INTO THIS CAST IRON BUILDING DRAIN.

H. SERVICE: ABOVE GROUND SANITARY WASTE AND VENT, LAUNDRY WASTE AND VENT (NON COMMERCIAL SPACES)
PIPE MATERIAL: SCHEDULE 40 PVC (EXCEPT AS NOTED ON PLANS)
FITTING MATERIAL: SCHEDULE 40 PVC (EXCEPT AS NOTED ON PLANS)
PIPE JOINT: SOLVENT WELD (EXCEPT AS NOTED ON PLANS)

I. SERVICE: BELOW GROUND SANITARY WASTE AND VENT, LAUNDRY WASTE AND VENT (NON COMMERCIAL SPACES)
PIPE MATERIAL: SCHEDULE 40 PVC (EXCEPT AS NOTED ON PLANS)
FITTING MATERIAL: SCHEDULE 40 PVC (EXCEPT AS NOTED ON PLANS)
PIPE JOINT: SOLVENT WELD (EXCEPT AS NOTED ON PLANS)

J. SERVICE(OPTION 1): NATURAL GAS (INCLUDING RELIEF VENTS) 2-1/2 INCH AND SMALLER
PIPE MATERIAL: SCHEDULE 40 BLACK STEEL
FITTING MATERIAL: VIEGA MEGAPRESS CARBON STEEL FITTINGS.
PIPE JOINT: VIEGA MEGAPRESS CARBON STEEL FITTINGS.

K. SERVICE(OPTION 2): NATURAL GAS (2 INCH AND SMALLER) INCLUDING PIPING WITHIN DWELLING UNIT AND FROM THE METER (UPON ENTERING THE BUILDING) TO THE DWELLING UNIT.
PIPE MATERIAL: CORRUGATED STAINLESS STEEL TUBING SYSTEM (CSST), WITH ALL REQUIRED BONDING, STRIKE PLATES, SUPPORTS, ETC. INSTALLED PER MANUFACTURER'S LISTING REQUIREMENTS AND ALL APPLICABLE CODE REQUIREMENTS.

L. SERVICE: NATURAL GAS (3 INCH AND LARGER)
PIPE MATERIAL: SCHEDULE 40 BLACK STEEL (ASTM A120).
FITTING MATERIAL: CARBON STEEL
PIPE JOINT: WELDED, FLANGE.

NOTE:
CAST IRON AND PVC PIPING USE AS NOTED ABOVE IS IN ACCORDANCE WITH THE STATE PLUMBING BOARD INTERPRETATION DATED 06-07-13. ADDITIONAL INFORMATION CAN BE OBTAINED FROM THE STATE PLUMBING BOARD WEB SITE.

X. PIPE MATERIAL: BELOW GROUND TRACPIPE PRE-SLEEVED FLEXIBLE GAS PIPING. INSTALLED PER MANUFACTURE'S LISTING REQUIREMENTS AND ALL APPLICABLE CODE REQUIREMENTS.

WB&A
Wozny/Barbar & Associates, Inc.
CONSULTING ENGINEERS
1076 Washington Street, Hanover, MA 02339, Tel: (781) 826-4144, Fax: (781) 924-5792
161 Exchange Street, 3rd Floor, Pawtucket, RI 02860
www.wbaengineers.com

Date issued:

07.15.19

WINSLOW ARCHITECTS INC
89 MASSACHUSETTS AVE.
ARLINGTON, MA 02474
P: 781 648.6600
F: 781 648.6601
www.winslowarchitects.com

Owner/Developer:

MEDFIELD GREEN LLC.

Project:

MEDFIELD GREEN

Drawing:

Plumbing Legend, Schedules, & Notes

Revisions:

No.	Description	Date

Stamp:

ANY REPRODUCTION, POSSESSION OR USE OF THIS DRAWING WITHOUT THE WRITTEN PERMISSION OF WINSLOW ARCHITECTS INC. IS PROHIBITED. VIOLATORS WILL BE PROSECUTED TO THE FULL EXTENT OF THE LAW.
© 2019 WINSLOW ARCHITECTS, INC.

Project number:

16-515

Sheet:

P-001

7/15/2019 5:00 PM

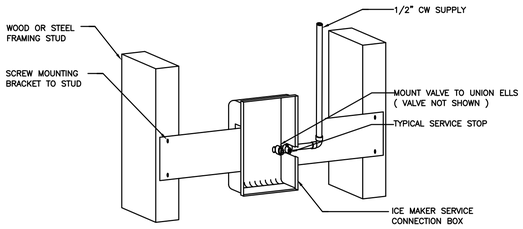

1 ICE MAKER BOX DIAGRAM
SCALE: NONE
NOTE: PROVIDE RATED BOX IN RATED WALLS.

NOTES:
1. ICE MAKER SUPPLIES TO INCLUDE WATER HAMMER ARRESTORS.

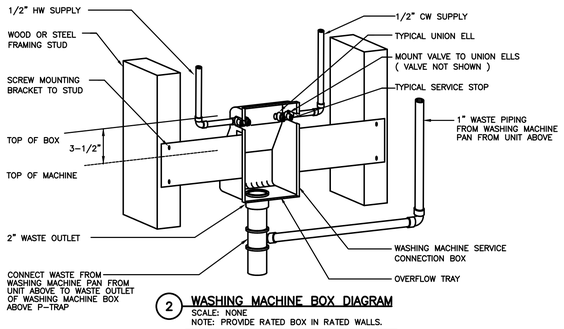

2 WASHING MACHINE BOX DIAGRAM
SCALE: NONE
NOTE: PROVIDE RATED BOX IN RATED WALLS.

NOTES:
1. LAUNDRY SUPPLIES TO INCLUDE WATER HAMMER ARRESTORS.
2. VALVE BOX TO BE INSTALLED WITHIN FURRED WALL OF CLOSET. VALVE SHALL BE ACCESSIBLE WITHIN ARMS REACH.

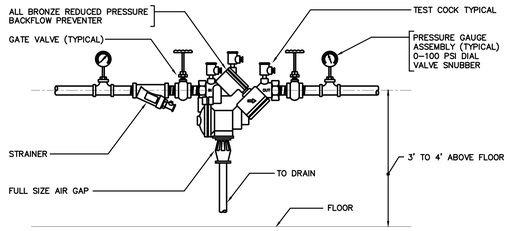

NOTES:
1. BACKFLOW PREVENTER SHALL BE APPROVED BY THE DEPARTMENT OF ENVIRONMENTAL PROTECTION AGENCY.
2. BACKFLOW PREVENTER SHALL BE IN COMPLETE ACCORDANCE WITH AUTHORITIES HAVING JURISDICTION.
3. THE PLUMBING CONTRACTOR SHALL SUBMIT PLANS AND DEVICE INFORMATION FOR APPROVAL PRIOR TO INSTALLATION.
4. FURNISH TO OWNER ONE TEST KIT AND SPARE PARTS KIT FOR EACH DEVICE.
5. THIS CONTRACTOR SHALL ACT AS THE OWNERS AGENT IN SEEKING APPROVAL FROM ALL LOCAL AND STATE AUTHORITIES.
6. THIS CONTRACTOR SHALL SUBMIT ALL PLANS, SPECS. AND APPLICATIONS REQUIRED FOR APPROVAL AND PAY ALL FEES.
7. SEE FLOOR PLANS FOR SIZES.
8. MAINTAIN 1'-0" CLEARANCE FROM WALL.
9. BACKFLOW PREVENTER SHALL BE EQUAL TO WATTS MODEL NUMBER LF009QT.

3 REDUCED PRESSURE BACKFLOW PREVENTER
SCALE: NONE

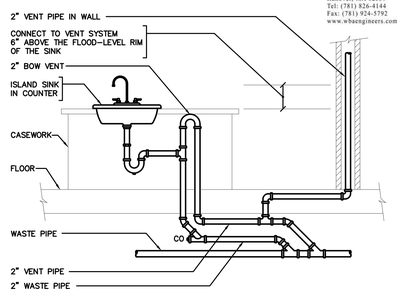

4 BOW VENT AT ISLAND SINK
SCALE: NONE

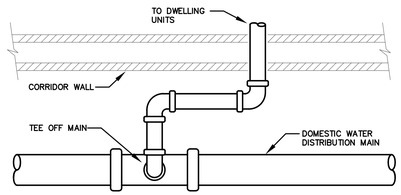

NOTE:
1. UTILIZE SWING JOINT WHEN BRANCHING OFF PERPENDICULARLY FROM MAIN TO PENETRATE A WALL PARALLEL TO MAIN.
2. PIPE HANGERS MUST BE NO LESS THAN 6" FROM ANY FITTING.

5 SWING JOINT PLAN VIEW DETAIL
SCALE: NONE

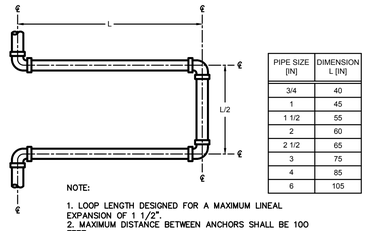

PIPE SIZE [IN]	DIMENSION L [IN]
3/4	40
1	45
1 1/2	55
2	60
2 1/2	65
3	75
4	85
6	105

NOTE:
1. LOOP LENGTH DESIGNED FOR A MAXIMUM LINEAL EXPANSION OF 1 1/2".
2. MAXIMUM DISTANCE BETWEEN ANCHORS SHALL BE 100 FEET

5 WATER EXPANSION LOOP DETAIL
SCALE: NONE

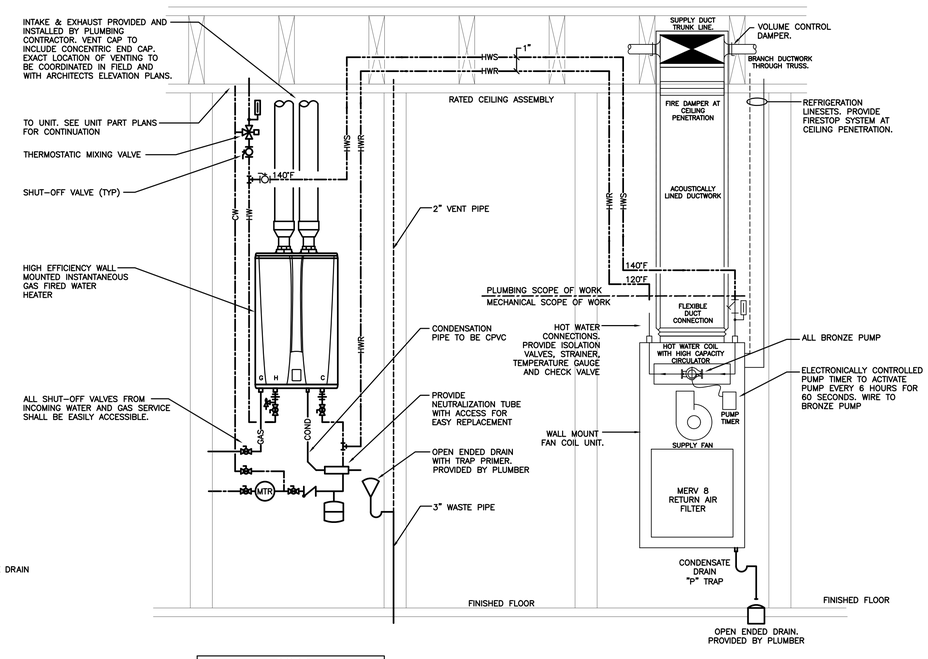

LEGEND
- CHECK VALVE
- PRESSURE RELIEF VALVE
- EXPANSION TANK
- MIXING VALVE
- AQUASTAT
- FULL-PORT BALL VALVE

10 DOMESTIC AQUATHERM PIPING DIAGRAM
SCALE: NONE

NOTES:
1. PLUMBING CONTRACTOR SHALL BE RESPONSIBLE FOR ALL PIPING AND CONNECTION TO HVAC AIR HANDLER.
2. PLUMBING CONTRACTOR SHALL INSULATE ALL PIPING BETWEEN HEATER AND AIR HANDLER.
3. 50' MAXIMUM DEVELOPED LENGTH FROM WATER HEATER TO FAN COIL UNIT (EACH WAY).
4. VENT PIPE SIZES TO BE BASED ON LENGTH TO TERMINATION.
5. INSTALLATION TO INCLUDE PLUMB EASY VALVES FOR HEATER FLUSHING
6. PLENUM RATES PIPING MATERIAL MUST BE UTILIZED IN ALL PLENUM SPACES.
7. INSULATE 8'-0" MIN. ALL DOMESTIC WATER PIPING TO AND FROM WATER HEATER.

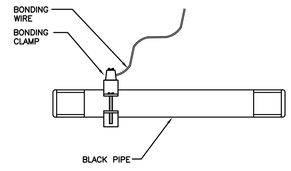

6 GAS PIPING BONDING DETAIL
SCALE: NONE

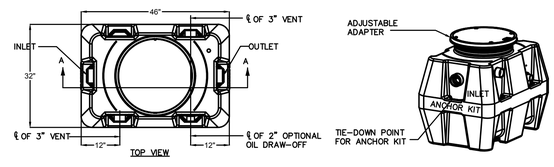

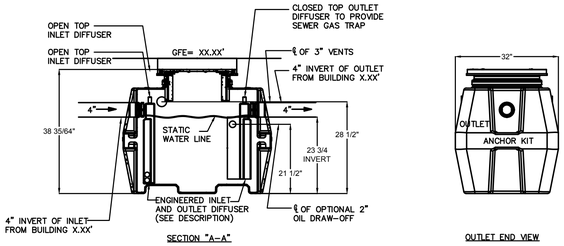

8 DETAIL – STATE APPROVED OIL/WATER SEPARATOR (STRIEM OS-75)
NO SCALE

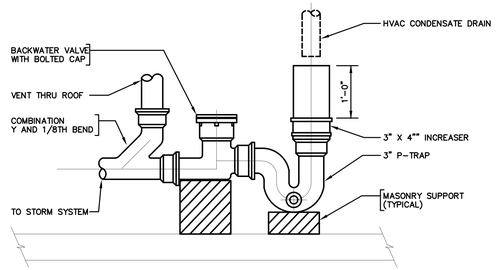

9 CLEAR WATER WASTE RECEPTOR DETAIL
SCALE: NONE

WB&A
Wozny/Barbar & Associates, Inc.
CONSULTING ENGINEERS
1076 Washington Street, Hanover, MA 02339, Tel: (781) 826-4144, Fax: (781) 924-5792
161 Exchange Street, 3rd Floor, Pawtucket, RI 02860
www.wbengineers.com

Date issued:

07.15.19

WINSLOW ARCHITECTS INC
89 MASSACHUSETTS AVE.
ARLINGTON, MA 02474
P: 781 648.6600
F: 781 648.6601
www.winslowarchitects.com

Owner/Developer:

MEDFIELD GREEN LLC.

Project:

MEDFIELD GREEN

Drawing:

Plumbing Details

Revisions:

No.	Description	Date

Stamp:

ANY REPRODUCTION, POSSESSION OR USE OF THIS DRAWING WITHOUT THE WRITTEN PERMISSION OF WINSLOW ARCHITECTS INC. IS PROHIBITED. VIOLATORS WILL BE PROSECUTED TO THE FULL EXTENT OF THE LAW.
© 2019 WINSLOW ARCHITECTS, INC.

Project number:

16-515

Sheet:

P-002

7/15/2019 5:00 PM

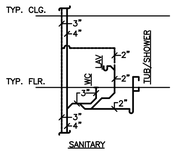

TYPICAL BATHROOM GROUP RISER DIAGRAM (BATH TUB)
NO SCALE

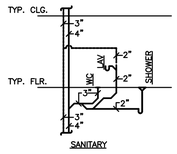

TYPICAL BATHROOM GROUP RISER DIAGRAM (SHOWER)
NO SCALE

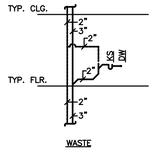

TYPICAL KITCHEN SINK RISER DIAGRAM
NO SCALE

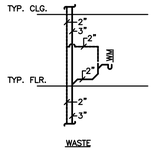

TYPICAL LAUNDRY RISER DIAGRAM
NO SCALE

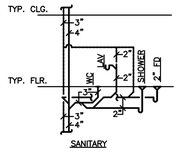

TYPICAL ACCESSIBLE BATHROOM GROUP RISER DIAGRAM
NO SCALE

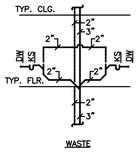

TYPICAL KITCHEN SINK RISER DIAGRAM
NO SCALE

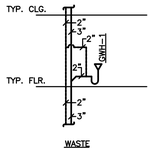

TYPICAL CONDENSATE RISER DIAGRAM
NO SCALE

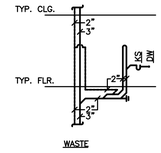

TYPICAL ISLAND KITCHEN SINK BOW VENT RISER DIAGRAM
NO SCALE

SANITARY WASTE RISER DIAGRAMS

CONTRACTOR SHALL COORDINATE ALL FIXTURES DESIGNATIONS WITH FLOOR PLANS (TYPICAL ALL RISERS)

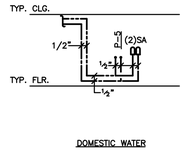

TYPICAL LAUNDRY GROUP RISER DIAGRAM
NO SCALE

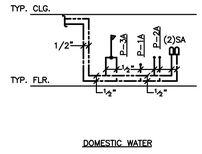

TYPICAL ACCESSIBLE BATHROOM GROUP RISER DIAGRAM
NO SCALE

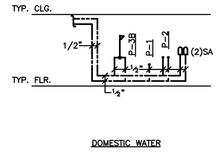

TYPICAL BATHROOM GROUP RISER DIAGRAM
NO SCALE

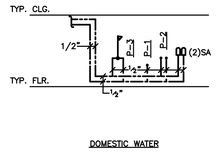

TYPICAL BATHROOM GROUP RISER DIAGRAM
NO SCALE

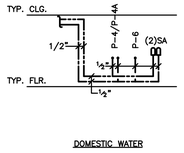

TYPICAL KITCHEN GROUP RISER DIAGRAM
NO SCALE

WATER PIPING RISER DIAGRAMS

CONTRACTOR SHALL COORDINATE ALL FIXTURES DESIGNATIONS WITH FLOOR PLANS (TYPICAL ALL RISERS)

WB&A
Wozny/Barbar & Associates, Inc.
CONSULTING ENGINEERS
1076 Washington Street
Hanover, MA 02339
Tel: (781) 826-4144
Fax: (781) 924-5792
www.wbaengineers.com
161 Exchange Street
3rd Floor
Pawtucket, RI 02860

Date issued:

07.15.19

WINSLOW ARCHITECTS INC

89 MASSACHUSETTS AVE.
ARLINGTON, MA 02474

P: 781 648.6600
F: 781 648.6601

www.winslowarchitects.com

Owner/Developer:

MEDFIELD GREEN LLC.

Project:

MEDFIELD GREEN

Drawing:

Plumbing Risers

Revisions:

No.	Description	Date

Stamp:

ANY REPRODUCTION, POSSESSION OR USE OF THIS DRAWING WITHOUT THE WRITTEN PERMISSION OF WINSLOW ARCHITECTS INC. IS PROHIBITED. VIOLATORS WILL BE PROSECUTED TO THE FULL EXTENT OF THE LAW.

© 2019 WINSLOW ARCHITECTS, INC.

Project number:

16-515

Sheet:

P-003

7/15/2019 5:00 PM

WB&A
Wozny/Barbar & Associates, Inc.
CONSULTING ENGINEERS
1076 Washington Street
Hanover, MA 02339
Tel: (781) 826-4144
Fax: (781) 924-5792
www.wbaengineers.com
161 Exchange Street
3rd Floor
Pawtucket, RI 02860

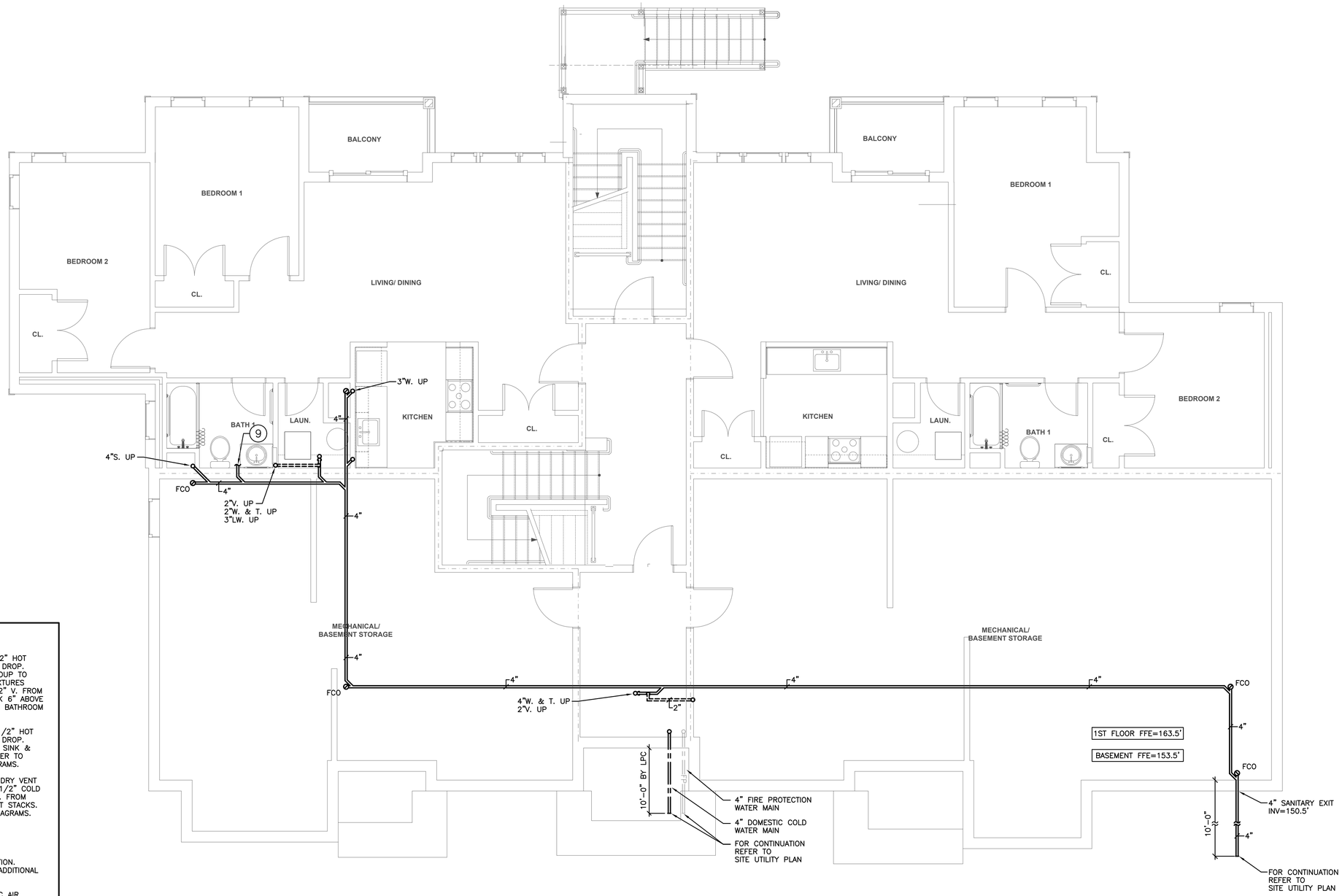

KEY NOTES:

1. 4" SOIL STACK, 3" VENT STACK, 1/2" HOT WATER DROP, & 1/2" COLD WATER DROP. CONNECT 3"S. FROM BATHROOM GROUP TO SOIL STACK BY WET VENTING OF FIXTURES THROUGH THE LAVATORY. EXTEND 2" V. FROM LAVATORY & CONNECT TO V. STACK 6" ABOVE FLOOD RIM OF LAVATORY. REFER TO BATHROOM GROUP RISER SANITARY DIAGRAMS.
2. 3" WASTE STACK, 2" VENT STACK, 1/2" HOT WATER DROP, & 1/2" COLD WATER DROP. CONNECT 2"W. & V. FROM KITCHEN SINK & DISHWASHER ADJACENT STACKS. REFER TO KITCHEN SINK SANITARY RISER DIAGRAMS.
3. 3" LAUNDRY WASTE STACK, 2" LAUNDRY VENT STACK, 1/2" HOT WATER DROP, & 1/2" COLD WATER DROP. CONNECT 2"LW. & LV. FROM WASHING MACHINE BOX TO ADJACENT STACKS. REFER TO LAUNDRY WASTE RISER DIAGRAMS.
4. NOT USED.
5. NOT USED.
6. DOMESTIC COLD WATER RISER LOCATION. REFER TO UNIT PART PLANS FOR ADDITIONAL INFORMATION.
7. CLEAR WATER WASTE STACK AT HVAC AIR HANDLERS SHALL CONVEY CONDENSATE THRU A FUNNEL CONNECTION AT EACH UNIT TO VERTICAL 2" PVC PIPING & BE HARD-PIPED TO STORM DRAINAGE SYSTEM. THIS STACK SHALL BE VENTED THRU THE ROOF. DRAIN TO INCLUDE A BALL FLOAT BACKWATER VALVE. REFER TO RISER DIAGRAMS FOR EACH ARRANGEMENT.
8. PROVIDE 3" WASTE STACK & 2"V. STACK WITH 2" WASTE & TRAP (STANDPIPE DRAIN) FOR COLLECTION OF WATER HEATER CONDENSATE & T&P RELIEF AT EACH WATER HEATER LOCATION. REFER TO RISER DIAGRAMS FOR EACH ARRANGEMENT.
9. EXTEND 3" SOIL PIPING TO BATHROOM GROUP FIXTURES.

GENERAL NOTE: RISER LOCATIONS NEED TO BE COORDINATED WITH UNIT AND AMENITY PLANS

Date issued:

07.15.19

WINSLOW ARCHITECTS INC

89 MASSACHUSETTS AVE.
ARLINGTON, MA 02474

P: 781 648.6600
F: 781 648.6601

www.winslowarchitects.com

Owner/Developer:

MEDFIELD GREEN LLC.

Project:

MEDFIELD GREEN

Drawing:

Plumbing Building A - Underground Plan

Revisions:

No.	Description	Date

Stamp:

ANY REPRODUCTION, POSSESSION OR USE OF THIS DRAWING WITHOUT THE WRITTEN PERMISSION OF WINSLOW ARCHITECTS INC. IS PROHIBITED. VIOLATORS WILL BE PROSECUTED TO THE FULL EXTENT OF THE LAW.

© 2019 WINSLOW ARCHITECTS, INC.

Project number:

16-515

Sheet:

P-AB-100.1

7/17/2019 10:11 AM

WB&A
Wozny/Barbar & Associates, Inc.
CONSULTING ENGINEERS
1076 Washington Street
Hanover, MA 02339
Tel: (781) 826-4144
Fax: (781) 924-5792
www.wbaengineers.com
161 Exchange Street
3rd Floor
Pawtucket, RI 02860

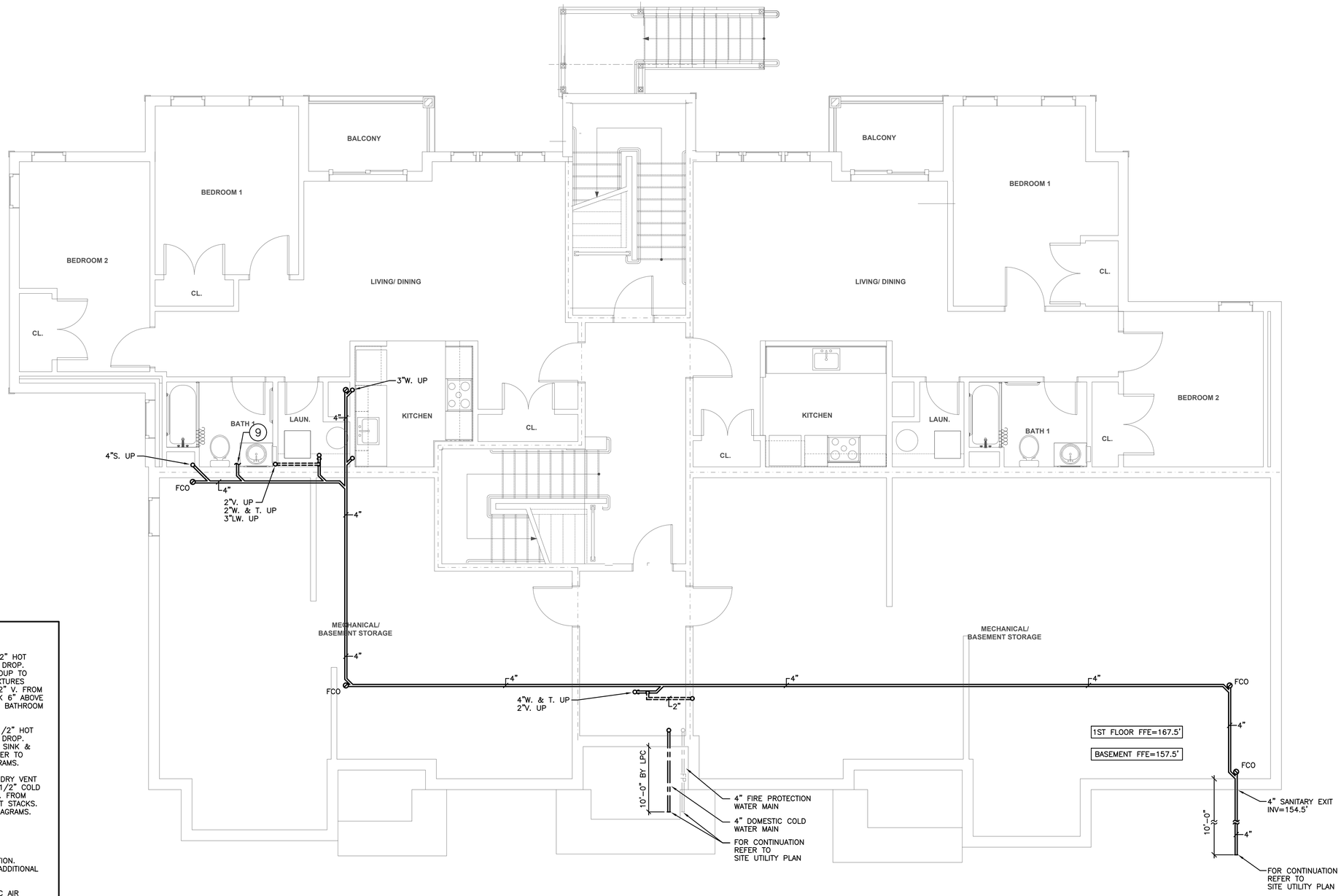

KEY NOTES:

1. 4" SOIL STACK, 3" VENT STACK, 1/2" HOT WATER DROP, & 1/2" COLD WATER DROP. CONNECT 3"S. FROM BATHROOM GROUP TO SOIL STACK BY WET VENTING OF FIXTURES THROUGH THE LAVATORY. EXTEND 2" V. FROM LAVATORY & CONNECT TO V. STACK 6" ABOVE FLOOD RIM OF LAVATORY. REFER TO BATHROOM GROUP RISER SANITARY DIAGRAMS.
2. 3" WASTE STACK, 2" VENT STACK, 1/2" HOT WATER DROP, & 1/2" COLD WATER DROP. CONNECT 2"W. & V. FROM KITCHEN SINK & DISHWASHER ADJACENT STACKS. REFER TO KITCHEN SINK SANITARY RISER DIAGRAMS.
3. 3" LAUNDRY WASTE STACK, 2" LAUNDRY VENT STACK, 1/2" HOT WATER DROP, & 1/2" COLD WATER DROP. CONNECT 2"LW. & LV. FROM WASHING MACHINE BOX TO ADJACENT STACKS. REFER TO LAUNDRY WASTE RISER DIAGRAMS.
4. NOT USED.
5. NOT USED.
6. DOMESTIC COLD WATER RISER LOCATION. REFER TO UNIT PART PLANS FOR ADDITIONAL INFORMATION.
7. CLEAR WATER WASTE STACK AT HVAC AIR HANDLERS SHALL CONVEY CONDENSATE THRU A FUNNEL CONNECTION AT EACH UNIT TO VERTICAL 2" PVC PIPING & BE HARD-PIPED TO STORM DRAINAGE SYSTEM. THIS STACK SHALL BE VENTED THRU THE ROOF. DRAIN TO INCLUDE A BALL FLOAT BACKWATER VALVE. REFER TO RISER DIAGRAMS FOR EACH ARRANGEMENT.
8. PROVIDE 3" WASTE STACK & 2"V. STACK WITH 2" WASTE & TRAP (STANDPIPE DRAIN) FOR COLLECTION OF WATER HEATER CONDENSATE & T&P RELIEF AT EACH WATER HEATER LOCATION. REFER TO RISER DIAGRAMS FOR EACH ARRANGEMENT.
9. EXTEND 3" SOIL PIPING TO BATHROOM GROUP FIXTURES.

GENERAL NOTE: RISER LOCATIONS NEED TO BE COORDINATED WITH UNIT AND AMENITY PLANS

Date issued:

07.15.19

WINSLOW ARCHITECTS INC

89 MASSACHUSETTS AVE.
ARLINGTON, MA 02474

P: 781 648.6600
F: 781 648.6601

www.winslowarchitects.com

Owner/Developer:

MEDFIELD GREEN LLC.

Project:

MEDFIELD GREEN

Drawing:

Plumbing Building B - Underground Plan

Revisions:

No.	Description	Date

Stamp:

ANY REPRODUCTION, POSSESSION OR USE OF THIS DRAWING WITHOUT THE WRITTEN PERMISSION OF WINSLOW ARCHITECTS INC. IS PROHIBITED. VIOLATORS WILL BE PROSECUTED TO THE FULL EXTENT OF THE LAW.

© 2019 WINSLOW ARCHITECTS, INC.

Project number:

16-515

Sheet:

P-AB-100.2

7/17/2019 10:11 AM

WB&A
Wozny/Barbar & Associates, Inc.
CONSULTING ENGINEERS
1076 Washington Street
Hanover, MA 02339
Tel: (781) 826-4144
Fax: (781) 924-5792
www.wbaengineers.com
161 Exchange Street
3rd Floor
Pawtucket, RI 02860

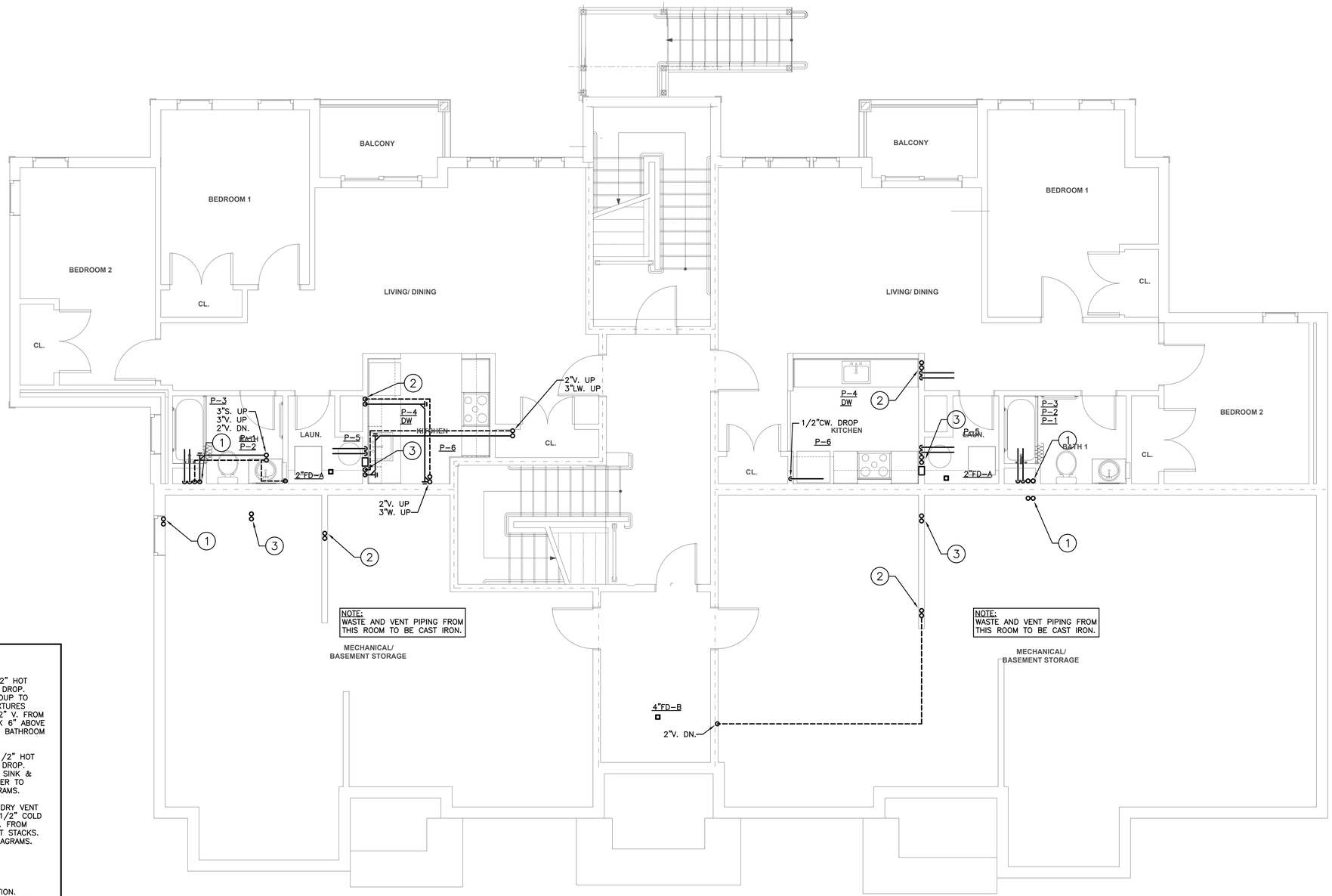

KEY NOTES:

1. 4" SOIL STACK, 3" VENT STACK, 1/2" HOT WATER DROP, & 1/2" COLD WATER DROP. CONNECT 3"S. FROM BATHROOM GROUP TO SOIL STACK BY WET VENTING OF FIXTURES THROUGH THE LAVATORY. EXTEND 2" V. FROM LAVATORY & CONNECT TO V. STACK 6" ABOVE FLOOD RIM OF LAVATORY. REFER TO BATHROOM GROUP RISER SANITARY DIAGRAMS.
2. 3" WASTE STACK, 2" VENT STACK, 1/2" HOT WATER DROP, & 1/2" COLD WATER DROP. CONNECT 2"W. & V. FROM KITCHEN SINK & DISHWASHER ADJACENT STACKS. REFER TO KITCHEN SINK SANITARY RISER DIAGRAMS.
3. 3" LAUNDRY WASTE STACK, 2" LAUNDRY VENT STACK, 1/2" HOT WATER DROP, & 1/2" COLD WATER DROP. CONNECT 2"LW. & LV. FROM WASHING MACHINE BOX TO ADJACENT STACKS. REFER TO LAUNDRY WASTE RISER DIAGRAMS.
4. NOT USED.
5. NOT USED.
6. DOMESTIC COLD WATER RISER LOCATION. REFER TO UNIT PART PLANS FOR ADDITIONAL INFORMATION.
7. CLEAR WATER WASTE STACK AT HVAC AIR HANDLERS SHALL CONVEY CONDENSATE THRU A FUNNEL CONNECTION AT EACH UNIT TO VERTICAL 2" PVC PIPING & BE HARD-PIPED TO STORM DRAINAGE SYSTEM. THIS STACK SHALL BE VENTED THRU THE ROOF. DRAIN TO INCLUDE A BALL FLOAT BACKWATER VALVE. REFER TO RISER DIAGRAMS FOR EACH ARRANGEMENT.
8. PROVIDE 3" WASTE STACK & 2"V. STACK WITH 2" WASTE & TRAP (STANDPIPE DRAIN) FOR COLLECTION OF WATER HEATER CONDENSATE & T&P RELIEF AT EACH WATER HEATER LOCATION. REFER TO RISER DIAGRAMS FOR EACH ARRANGEMENT.
9. EXTEND 3" SOIL PIPING TO BATHROOM GROUP FIXTURES.

GENERAL NOTE: RISER LOCATIONS NEED TO BE COORDINATED WITH UNIT AND AMENITY PLANS

Date issued:

07.15.19

WINSLOW ARCHITECTS INC

89 MASSACHUSETTS AVE.
ARLINGTON, MA 02474

P: 781 648.6600
F: 781 648.6601

www.winslowarchitects.com

Owner/Developer:

MEDFIELD GREEN LLC.

Project:

MEDFIELD GREEN

Drawing:

Plumbing Building A & B - Basement Floor Plan

Revisions:

No.	Description	Date

Stamp:

ANY REPRODUCTION, POSSESSION OR USE OF THIS DRAWING WITHOUT THE WRITTEN PERMISSION OF WINSLOW ARCHITECTS INC. IS PROHIBITED. VIOLATORS WILL BE PROSECUTED TO THE FULL EXTENT OF THE LAW.

© 2019 WINSLOW ARCHITECTS, INC.

Project number:

16-515

Sheet:

P-AB-101

7/17/2019 10:11 AM

WB&A
Wozny/Barbar & Associates, Inc.
CONSULTING ENGINEERS
1076 Washington Street
Hanover, MA 02339
Tel: (781) 826-4144
Fax: (781) 924-5792
www.wbaengineers.com
161 Exchange Street
3rd Floor
Pawtucket, RI 02860

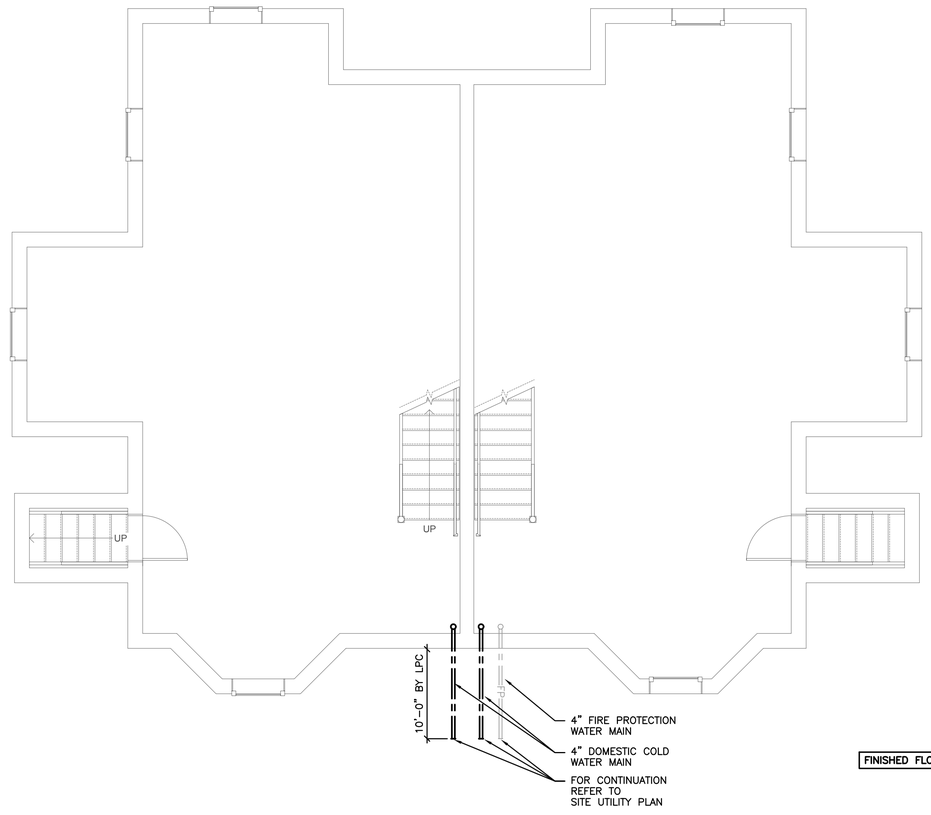

FINISHED FLOOR ELEVATION CALLED 0.00'

Date issued:

07.15.19

WINSLOW ARCHITECTS INC

89 MASSACHUSETTS AVE.
ARLINGTON, MA 02474

P: 781 648.6600
F: 781 648.6601

www.winslowarchitects.com

Owner/Developer:

MEDFIELD GREEN LLC.

Project:

MEDFIELD GREEN

Drawing:

Plumbing Building C - Underground Plan

Revisions:

No.	Description	Date

Stamp:

ANY REPRODUCTION, POSSESSION OR USE OF THIS DRAWING WITHOUT THE WRITTEN PERMISSION OF WINSLOW ARCHITECTS INC. IS PROHIBITED. VIOLATORS WILL BE PROSECUTED TO THE FULL EXTENT OF THE LAW.

© 2019 WINSLOW ARCHITECTS, INC.

Project number:

16-515

Sheet:

P-C-100

7/15/2019 5:00 PM

WB&A
Wozny/Barbar & Associates, Inc.
CONSULTING ENGINEERS
1076 Washington Street
Hanover, MA 02339
Tel: (781) 826-4144
Fax: (781) 924-5792
www.wbaengineers.com

161 Exchange Street
3rd Floor
Pawtucket, RI 02860

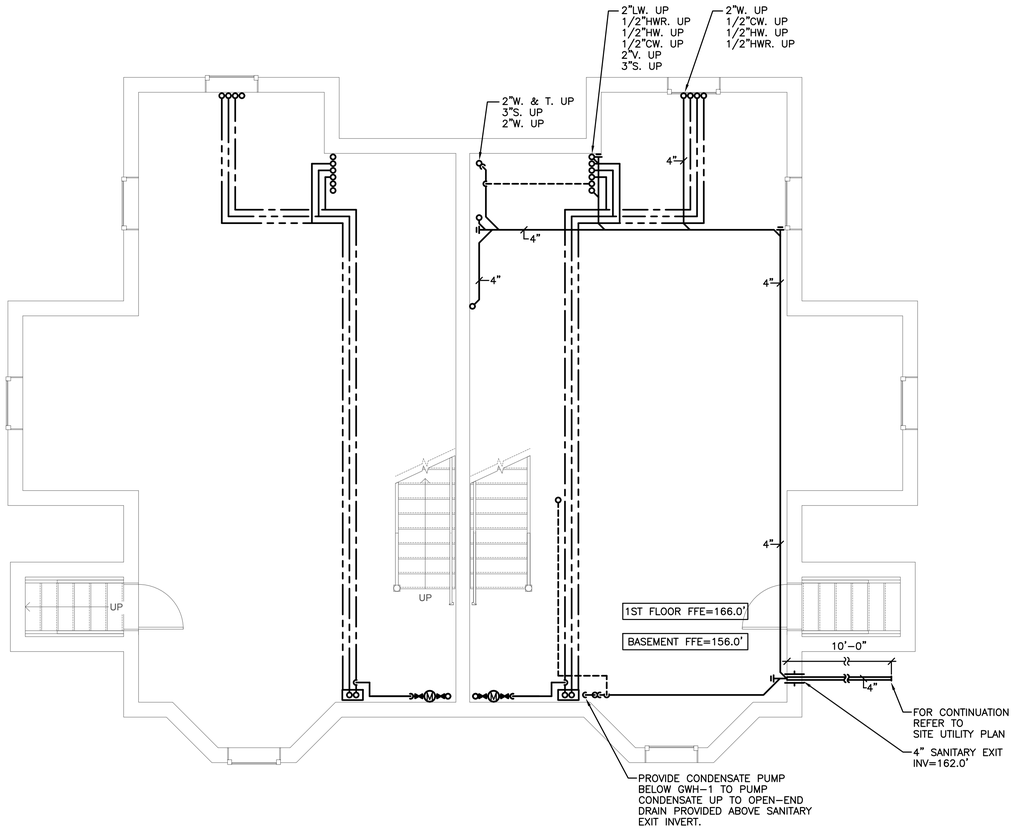

Date issued:

07.15.19

WINSLOW
ARCHITECTS
INC

89 MASSACHUSETTS AVE.
ARLINGTON, MA 02474

P: 781 648.6600
F: 781 648.6601

www.winslowarchitects.com

Owner/Developer:

MEDFIELD
GREEN LLC.

Project:

MEDFIELD GREEN

Drawing:

Plumbing Building C - Basement Floor Plan

Revisions:

No.	Description	Date

Stamp:

ANY REPRODUCTION, POSSESSION OR USE OF THIS DRAWING WITHOUT THE WRITTEN PERMISSION OF WINSLOW ARCHITECTS INC. IS PROHIBITED. VIOLATORS WILL BE PROSECUTED TO THE FULL EXTENT OF THE LAW.

© 2019 WINSLOW ARCHITECTS, INC.

Project number:

16-515

Sheet:

P-C-101

7/15/2019 5:00 PM

WB&A
Wozny/Barbar & Associates, Inc.
CONSULTING ENGINEERS
1076 Washington Street
Hanover, MA 02339
Tel: (781) 826-4144
Fax: (781) 924-5792
www.wbaengineers.com
161 Exchange Street
3rd Floor
Pawtucket, RI 02860

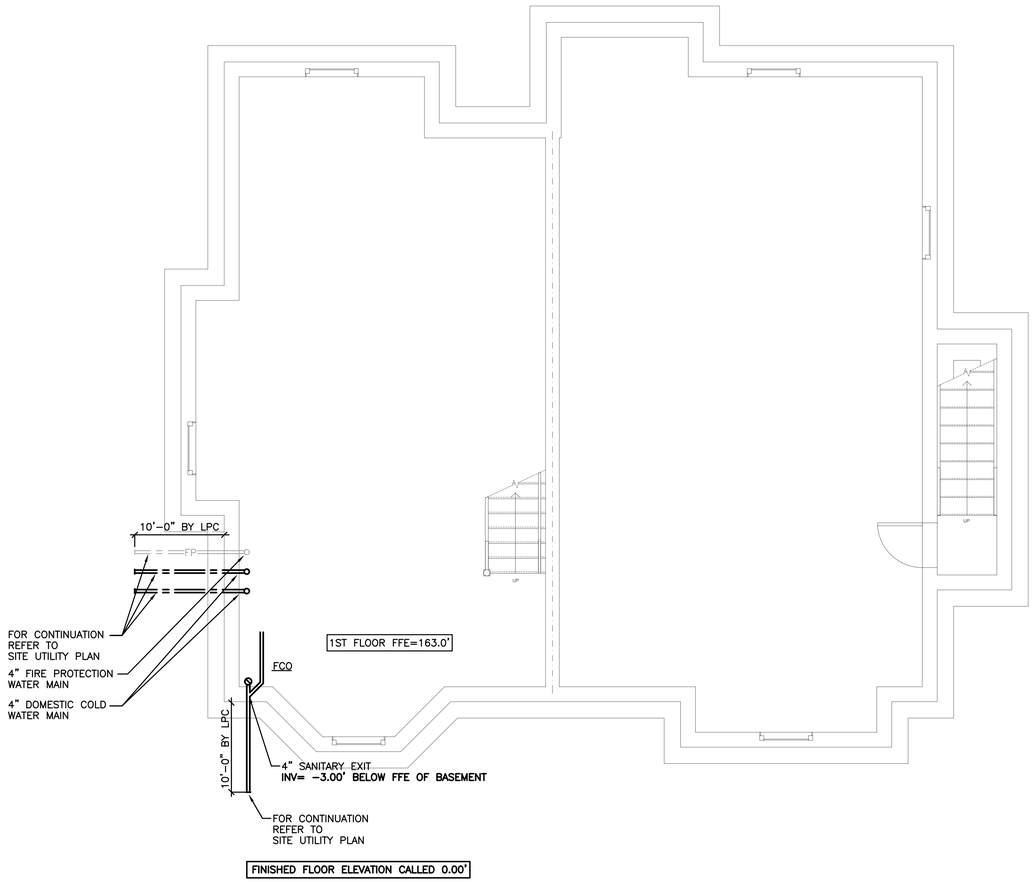

Date issued:

07.15.19

WINSLOW ARCHITECTS INC

89 MASSACHUSETTS AVE.
ARLINGTON, MA 02474

P: 781 648.6600
F: 781 648.6601

www.winslowarchitects.com

Owner/Developer:

MEDFIELD GREEN LLC.

Project:

MEDFIELD GREEN

Drawing:

Plumbing Building D - Underground Plan

Revisions:

No.	Description	Date

Stamp:

ANY REPRODUCTION, POSSESSION OR USE OF THIS DRAWING WITHOUT THE WRITTEN PERMISSION OF WINSLOW ARCHITECTS INC. IS PROHIBITED. VIOLATORS WILL BE PROSECUTED TO THE FULL EXTENT OF THE LAW.

© 2019 WINSLOW ARCHITECTS, INC.

Project number:

16-515

Sheet:

P-D-100

7/15/2019 5:00 PM

WB&A
Wozny/Barbar & Associates, Inc.
CONSULTING ENGINEERS
1076 Washington Street
Hanover, MA 02339
Tel: (781) 826-4144
Fax: (781) 924-5792
www.wbaengineers.com

161 Exchange Street
3rd Floor
Pawtucket, RI 02860

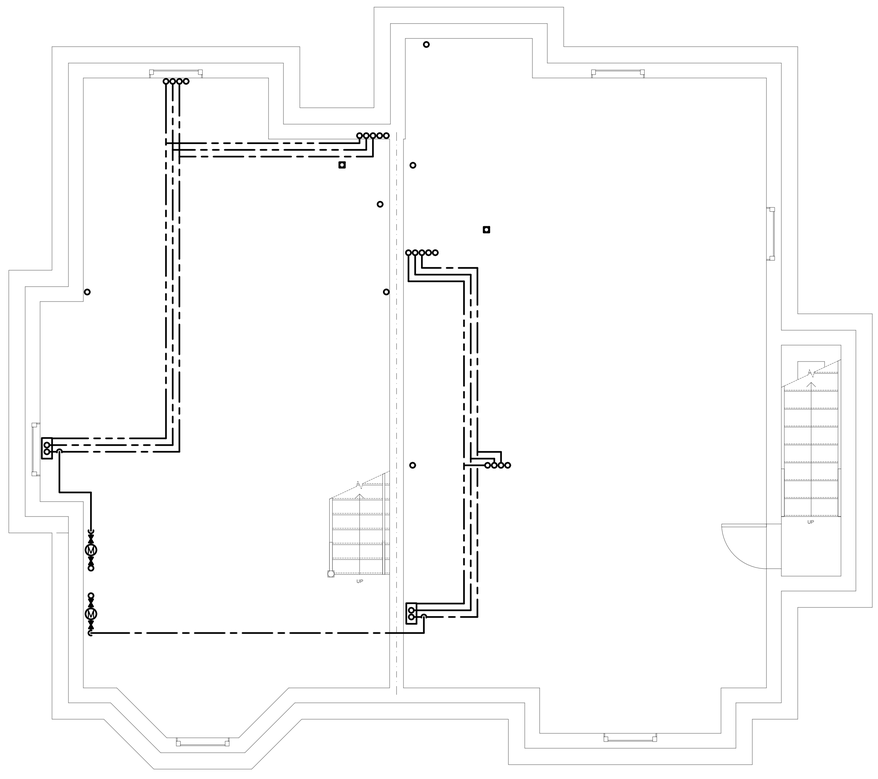

Date issued:

07.15.19

WINSLOW ARCHITECTS INC

89 MASSACHUSETTS AVE.
ARLINGTON, MA 02474

P: 781 648.6600
F: 781 648.6601

www.winslowarchitects.com

Owner/Developer:

MEDFIELD GREEN LLC.

Project:

MEDFIELD GREEN

Drawing:

Plumbing Building D - Basement Floor Plan

Revisions:

No.	Description	Date

Stamp:

ANY REPRODUCTION, POSSESSION OR USE OF THIS DRAWING WITHOUT THE WRITTEN PERMISSION OF WINSLOW ARCHITECTS INC. IS PROHIBITED. VIOLATORS WILL BE PROSECUTED TO THE FULL EXTENT OF THE LAW.

© 2019 WINSLOW ARCHITECTS, INC.

Project number:

16-515

Sheet:

P-D-101

7/15/2019 5:00 PM

WB&A
Wozny/Barbar & Associates, Inc.
CONSULTING ENGINEERS
1076 Washington Street
Hanover, MA 02339
Tel: (781) 826-4144
Fax: (781) 924-5792
www.wbaengineers.com
161 Exchange Street
3rd Floor
Pawtucket, RI 02860

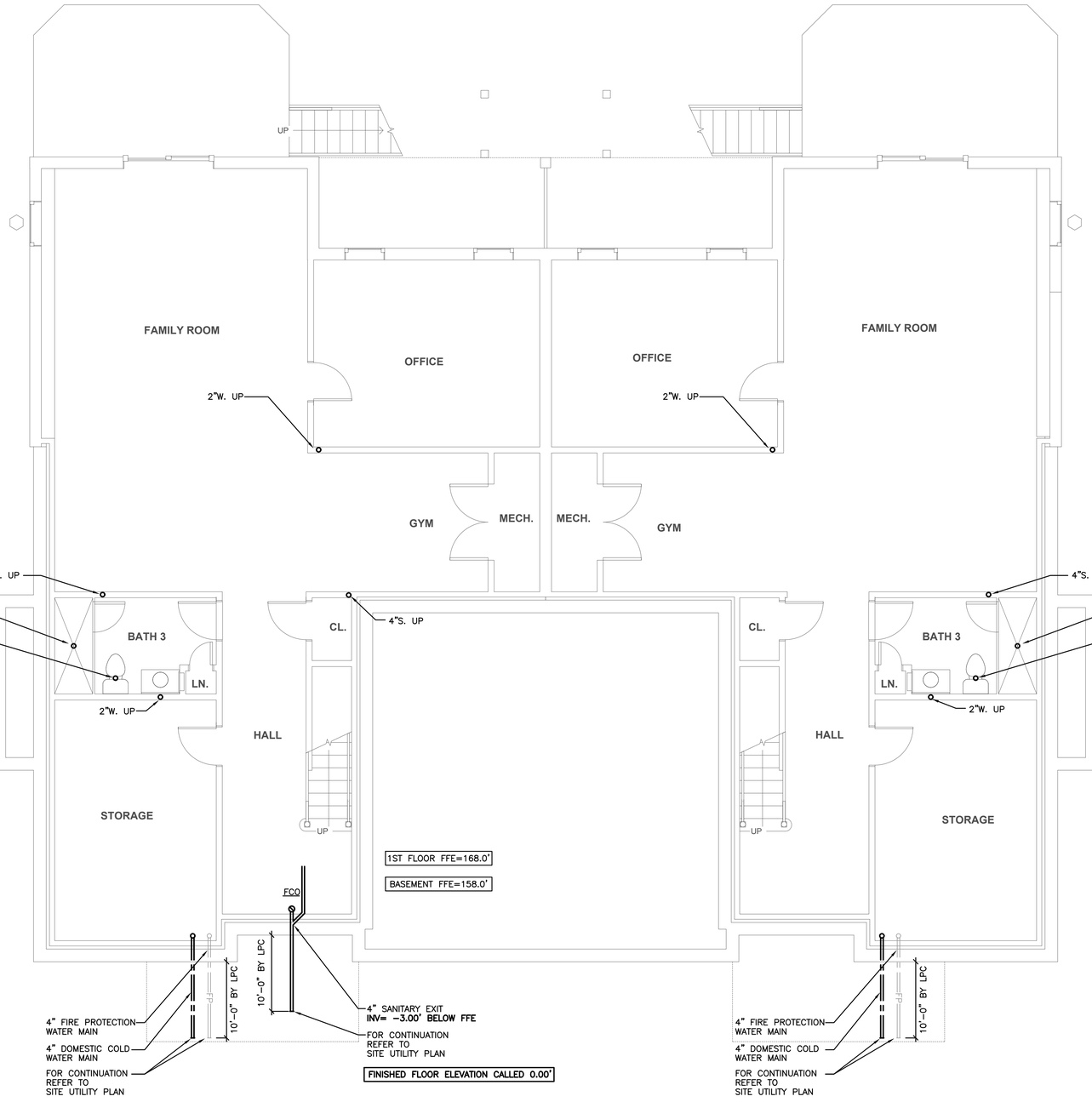

Date issued:

07.15.19

WINSLOW ARCHITECTS INC

89 MASSACHUSETTS AVE.
ARLINGTON, MA 02474

P: 781 648.6600
F: 781 648.6601

www.winslowarchitects.com

Owner/Developer:

MEDFIELD GREEN LLC.

Project:

MEDFIELD GREEN

Drawing:

Plumbing Building E - Underground Plan

Revisions:

No.	Description	Date

Stamp:

ANY REPRODUCTION, POSSESSION OR USE OF THIS DRAWING WITHOUT THE WRITTEN PERMISSION OF WINSLOW ARCHITECTS INC. IS PROHIBITED AND WILL SHALL BE PROSECUTED TO THE FULL EXTENT OF THE LAW.

© 2019 WINSLOW ARCHITECTS, INC.

Project number:

16-515

Sheet:

P-E-100

7/15/2019 5:00 PM

WB&A
Wozny/Barbar & Associates, Inc.
CONSULTING ENGINEERS
1076 Washington Street
Hanover, MA 02339
Tel: (781) 826-4144
Fax: (781) 924-5792
www.wbaengineers.com

161 Exchange Street
3rd Floor
Pawtucket, RI 02860

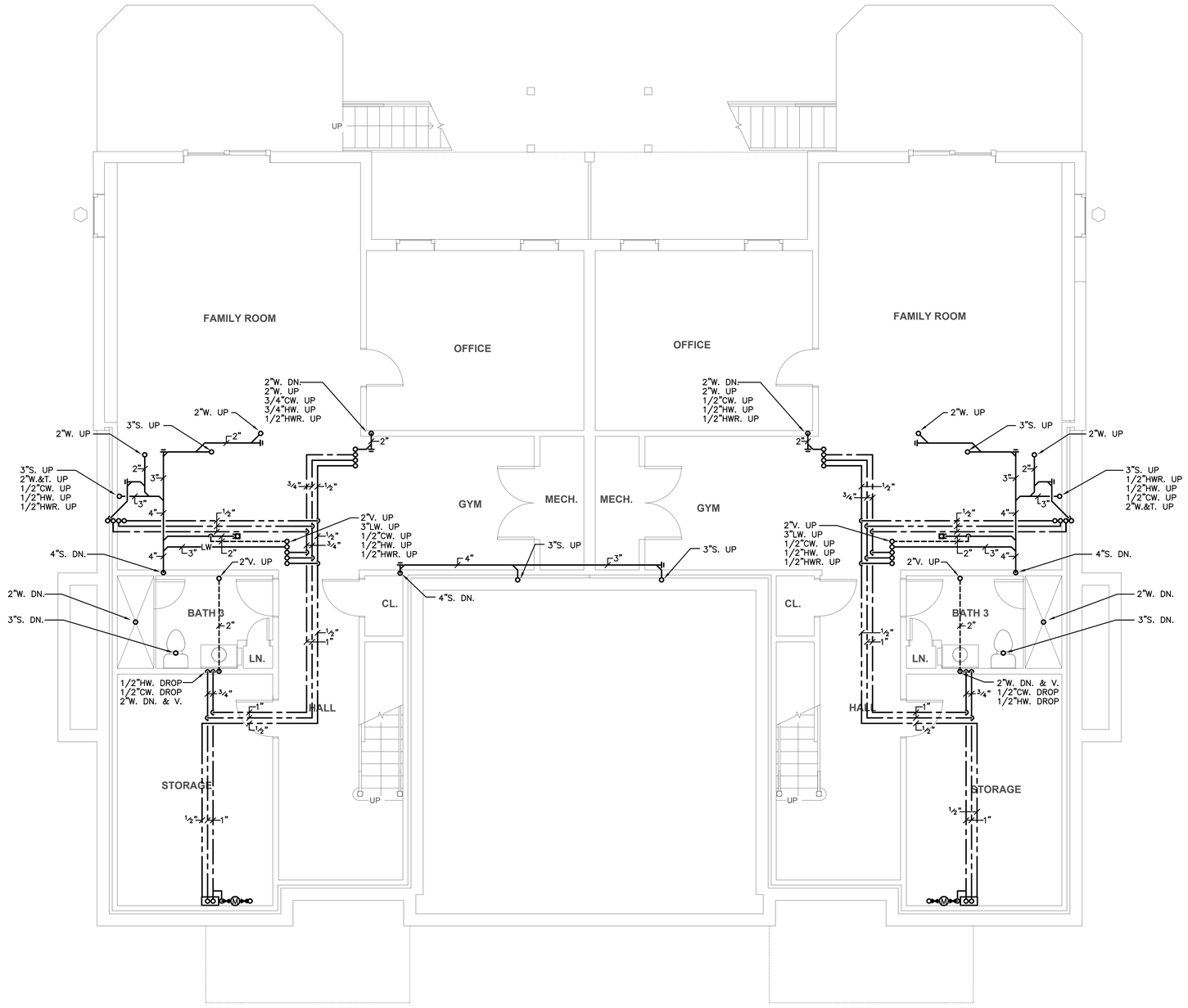

Date issued:

07.15.19

WINSLOW ARCHITECTS INC

89 MASSACHUSETTS AVE.
ARLINGTON, MA 02474

P: 781 648.6600
F: 781 648.6601

www.winslowarchitects.com

Owner/Developer:

MEDFIELD GREEN LLC.

Project:

MEDFIELD GREEN

Drawing:

Plumbing Building E - Basement Floor Plan

Revisions:

No.	Description	Date

Stamp:

ANY REPRODUCTION, POSSESSION OR USE OF THIS DRAWING WITHOUT THE WRITTEN PERMISSION OF WINSLOW ARCHITECTS INC. IS PROHIBITED. VIOLATORS WILL BE PROSECUTED TO THE FULL EXTENT OF THE LAW.

© 2019 WINSLOW ARCHITECTS, INC.

Project number:

16-515

Sheet:

P-E-101

7/15/2019 5:00 PM

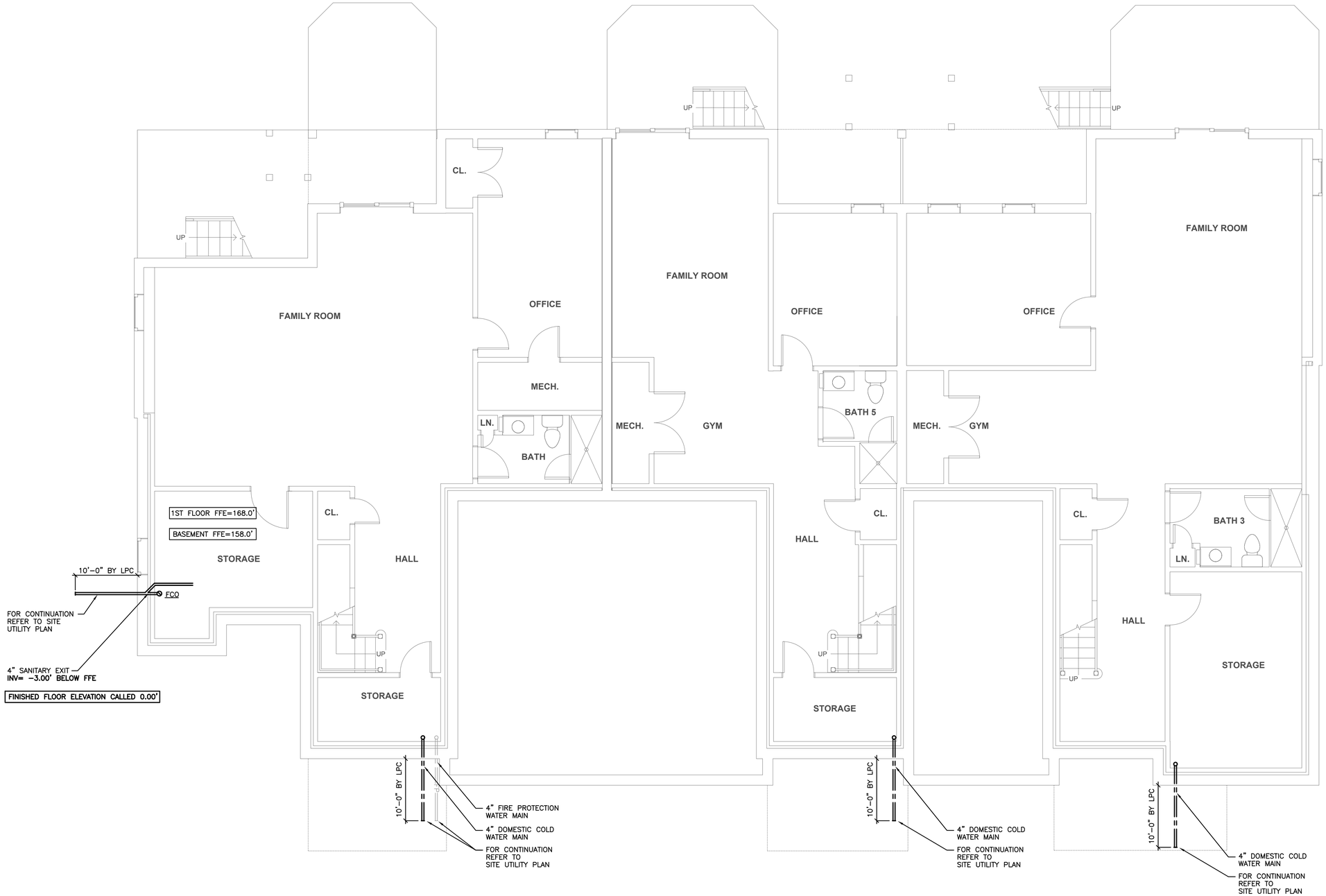

WB&A
Wozny/Barbar & Associates, Inc.
CONSULTING ENGINEERS
1076 Washington Street
Hanover, MA 02339
Tel: (781) 826-4144
Fax: (781) 924-5792
www.wbaengineers.com
161 Exchange Street
3rd Floor
Pawtucket, RI 02860

Date issued:

07.15.19

WINSLOW ARCHITECTS INC

89 MASSACHUSETTS AVE.
ARLINGTON, MA 02474

P: 781 648.6600
F: 781 648.6601

www.winslowarchitects.com

Owner/Developer:

MEDFIELD GREEN LLC.

Project:

MEDFIELD GREEN

Drawing:

Plumbing Building F - Underground Plan

Revisions:

No.	Description	Date

Stamp:

ANY REPRODUCTION, POSSESSION OR USE OF THIS DRAWING WITHOUT THE WRITTEN PERMISSION OF WINSLOW ARCHITECTS INC. IS PROHIBITED. VIOLATORS WILL BE PROSECUTED TO THE FULL EXTENT OF THE LAW.

© 2019 WINSLOW ARCHITECTS, INC.

Project number:

16-515

Sheet:

P-F-100

7/15/2019 5:00 PM

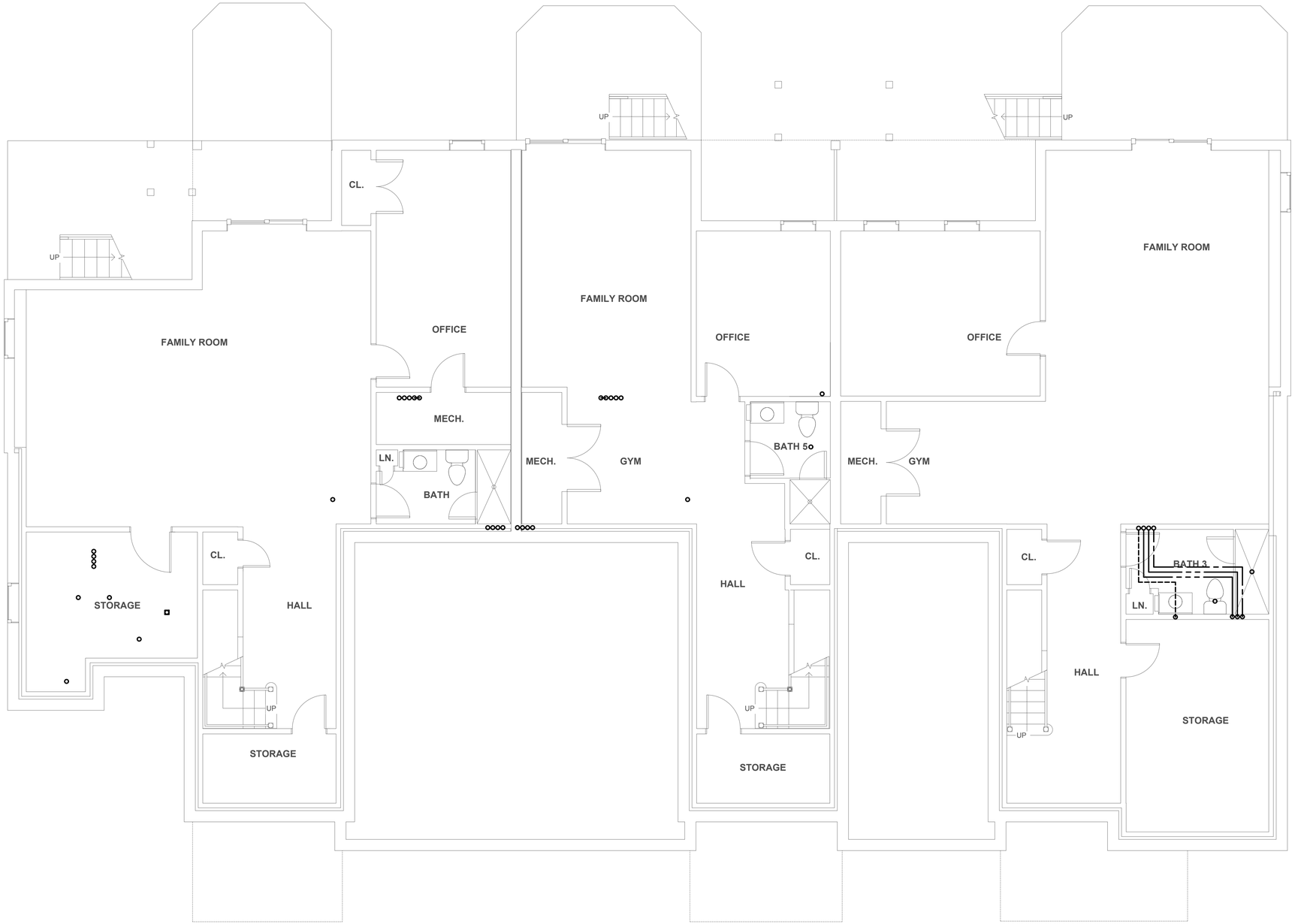

WB&A
Wozny/Barbar & Associates, Inc.
CONSULTING ENGINEERS
1076 Washington Street
Hanover, MA 02339
Tel: (781) 826-4144
Fax: (781) 924-5792
www.wbaengineers.com
161 Exchange Street
3rd Floor
Pawtucket, RI 02860

Date issued:

07.15.19

WINSLOW ARCHITECTS INC

89 MASSACHUSETTS AVE.
ARLINGTON, MA 02474

P: 781 648.6600
F: 781 648.6601

www.winslowarchitects.com

Owner/Developer:

MEDFIELD GREEN LLC.

Project:

MEDFIELD GREEN

Drawing:

Plumbing Building F - Basement Floor Plan

Revisions:

No.	Description	Date

Stamp:

ANY REPRODUCTION, POSSESSION OR USE OF THIS DRAWING WITHOUT THE WRITTEN PERMISSION OF WINSLOW ARCHITECTS INC. IS PROHIBITED. VIOLATORS WILL BE PROSECUTED TO THE FULL EXTENT OF THE LAW.

© 2019 WINSLOW ARCHITECTS, INC.

Project number:

16-515

Sheet:

P-F-101

7/15/2019 5:00 PM

WB&A
Wozny/Barbar & Associates, Inc.
CONSULTING ENGINEERS
1076 Washington Street
Hanover, MA 02339
Tel: (781) 826-4144
Fax: (781) 924-5792
www.wbaengineers.com
161 Exchange Street
3rd Floor
Pawtucket, RI 02860

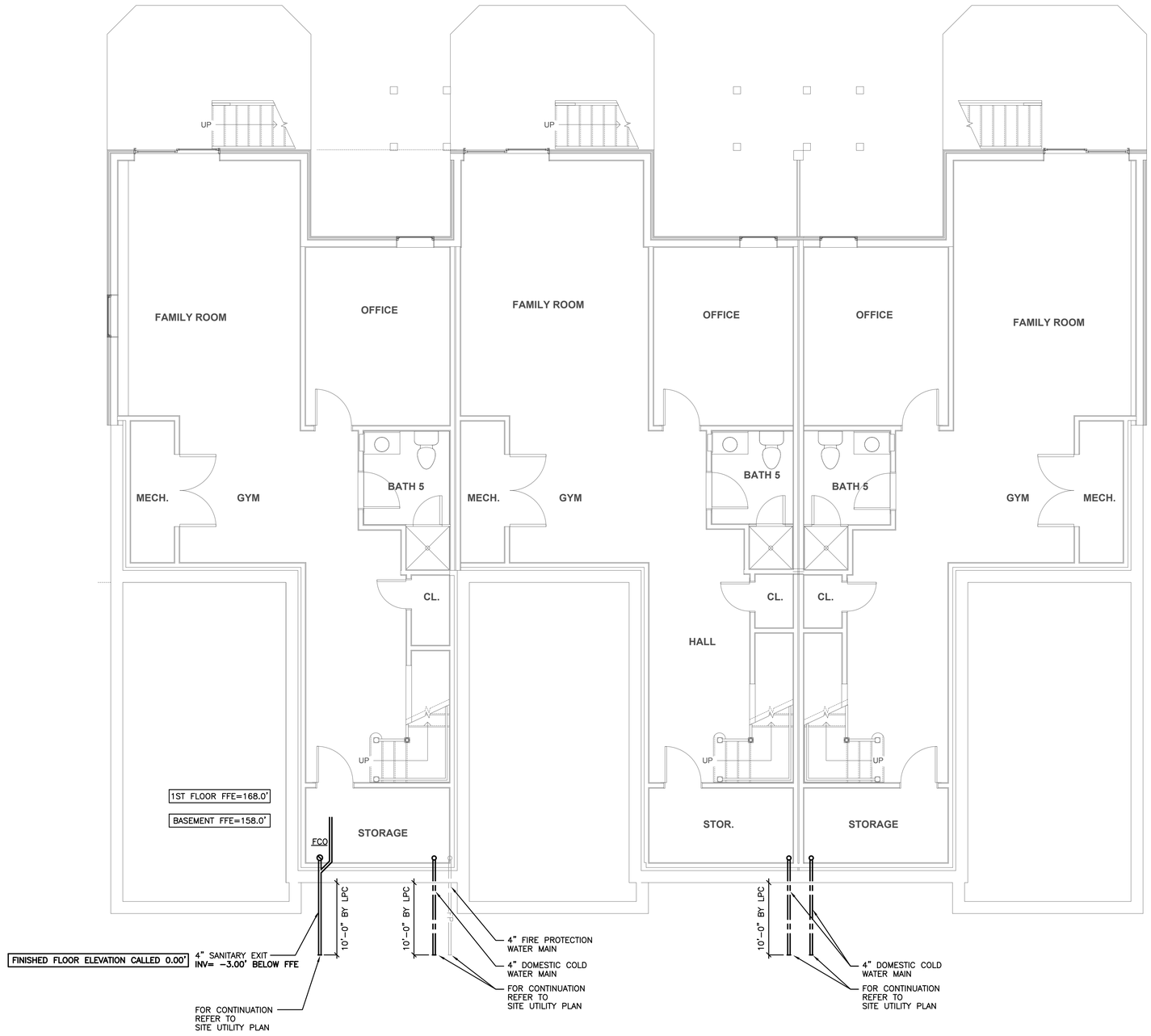

Date issued:

07.15.19

WINSLOW ARCHITECTS INC

89 MASSACHUSETTS AVE.
ARLINGTON, MA 02474

P: 781 648.6600
F: 781 648.6601

www.winslowarchitects.com

Owner/Developer:

MEDFIELD GREEN LLC.

Project:

MEDFIELD GREEN

Drawing:

Plumbing Building G - Underground Plan

Revisions:

No.	Description	Date

Stamp:

ANY REPRODUCTION, POSSESSION OR USE OF THIS DRAWING WITHOUT THE WRITTEN PERMISSION OF WINSLOW ARCHITECTS INC. IS PROHIBITED AND VIOLATORS WILL BE PROSECUTED TO THE FULL EXTENT OF THE LAW.

© 2019 WINSLOW ARCHITECTS, INC.

Project number:

16-515

Sheet:

P-G-100

7/15/2019 5:00 PM

WB&A
Wozny/Barbar & Associates, Inc.
CONSULTING ENGINEERS
1076 Washington Street
Hanover, MA 02339
Tel: (781) 826-4144
Fax: (781) 924-5792
www.wbaengineers.com
161 Exchange Street
3rd Floor
Pawtucket, RI 02860

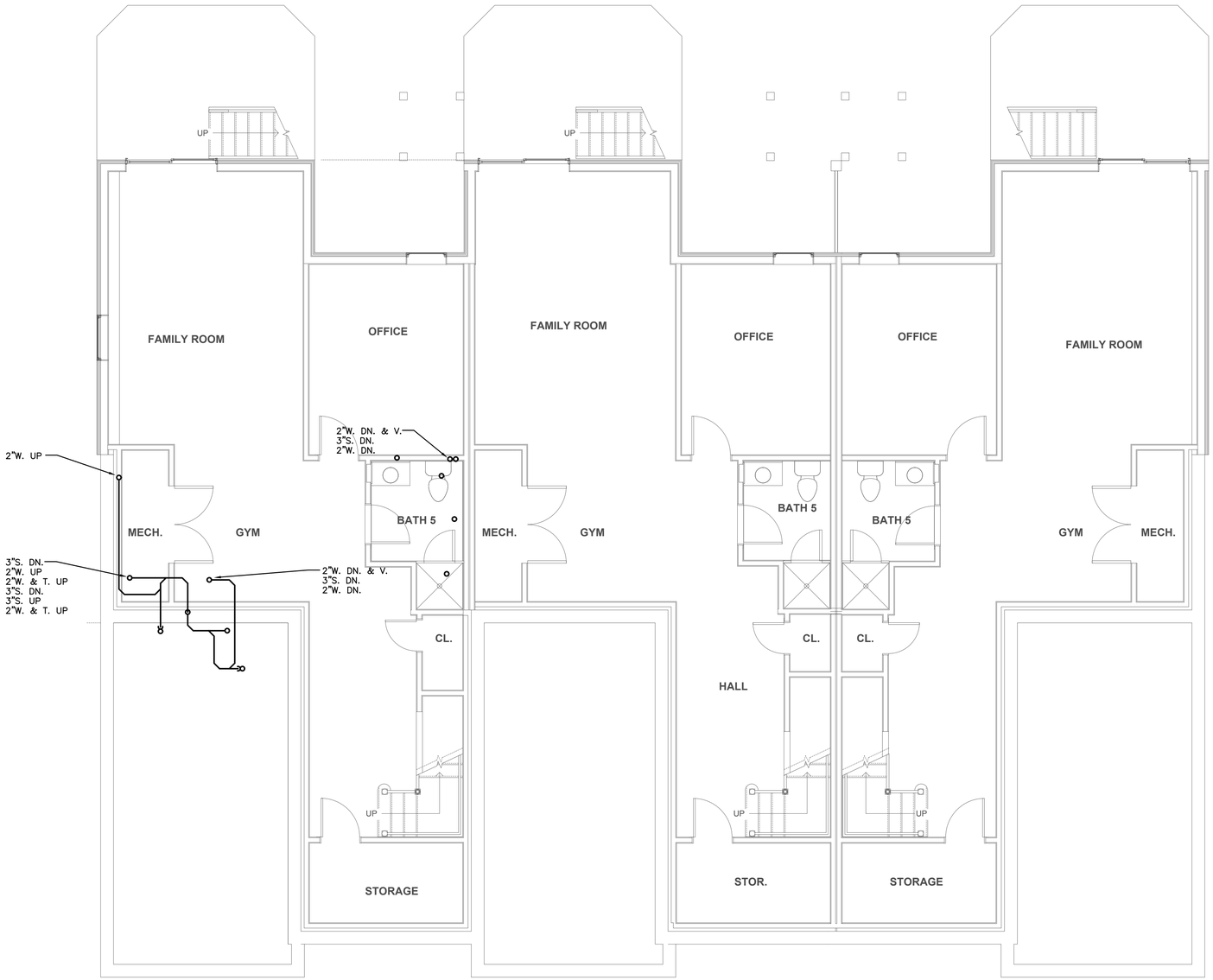

Date issued:

07.15.19

WINSLOW ARCHITECTS INC

89 MASSACHUSETTS AVE.
ARLINGTON, MA 02474

P: 781 648.6600
F: 781 648.6601

www.winslowarchitects.com

Owner/Developer:

MEDFIELD GREEN LLC.

Project:

MEDFIELD GREEN

Drawing:

Plumbing Building G - Basement Floor Plan

Revisions:

No.	Description	Date

Stamp:

ANY REPRODUCTION, POSSESSION OR USE OF THIS DRAWING WITHOUT THE WRITTEN PERMISSION OF WINSLOW ARCHITECTS INC. IS PROHIBITED. VIOLATORS WILL BE PROSECUTED TO THE FULL EXTENT OF THE LAW.

© 2019 WINSLOW ARCHITECTS, INC.

Project number:

16-515

Sheet:

P-G-101

7/15/2019 5:00 PM

WB&A
Wozny/Barbar & Associates, Inc.
CONSULTING ENGINEERS
1076 Washington Street
Hanover, MA 02339
Tel: (781) 826-4144
Fax: (781) 924-5792
www.wbaengineers.com
161 Exchange Street
3rd Floor
Pawtucket, RI 02860

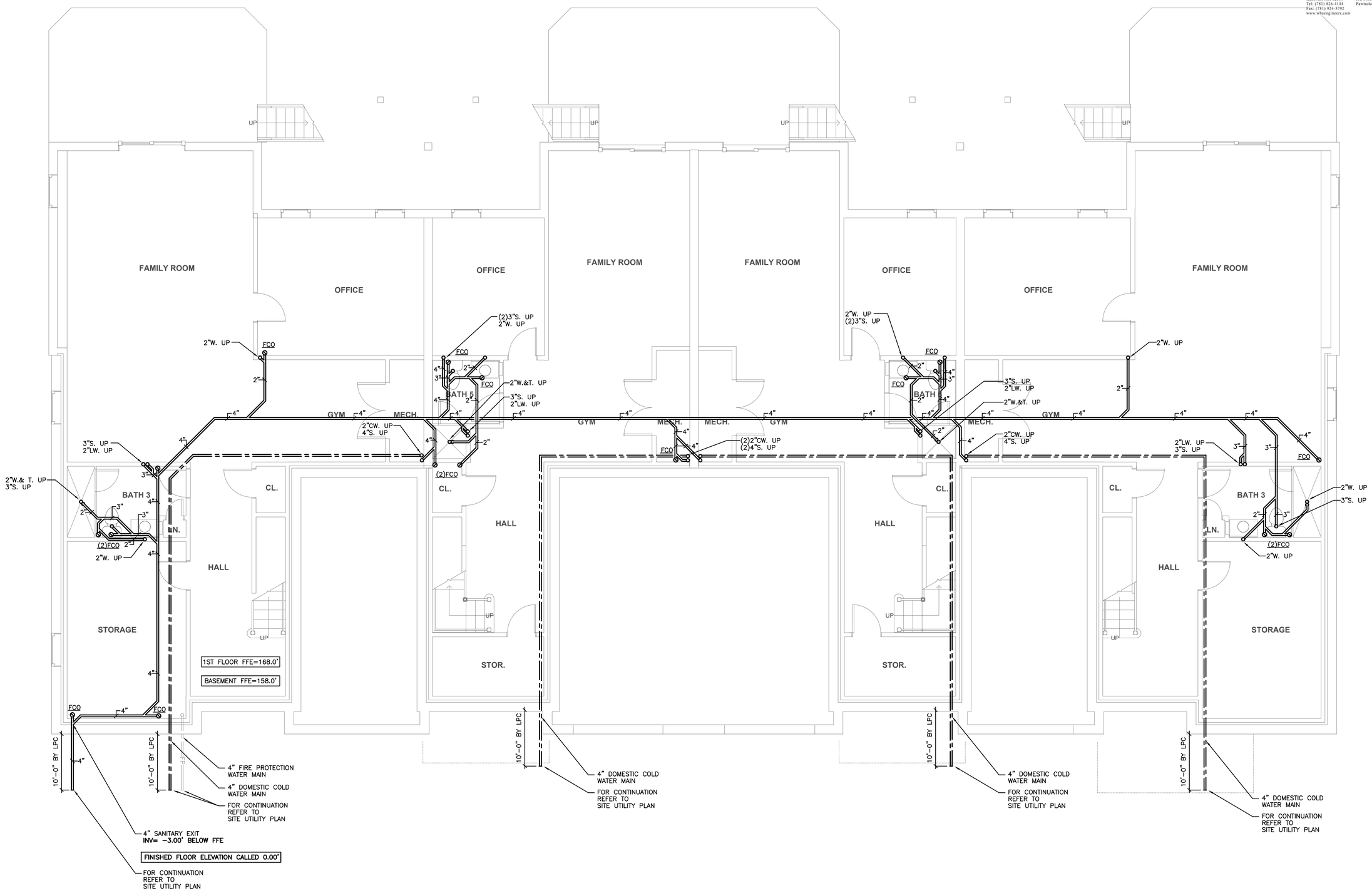

Date issued:

07.15.19

WINSLOW ARCHITECTS INC

89 MASSACHUSETTS AVE.
ARLINGTON, MA 02474

P: 781 648.6600
F: 781 648.6601

www.winslowarchitects.com

Owner/Developer:

MEDFIELD GREEN LLC.

Project:

MEDFIELD GREEN

Drawing:

Plumbing Building H - Underground Plan

Revisions:

No.	Description	Date

Stamp:

ANY REPRODUCTION, POSSESSION OR USE OF THIS DRAWING WITHOUT THE WRITTEN PERMISSION OF WINSLOW ARCHITECTS INC. IS PROHIBITED. VIOLATORS WILL BE PROSECUTED TO THE FULL EXTENT OF THE LAW.

© 2019 WINSLOW ARCHITECTS, INC.

Project number:

16-515

Sheet:

P-H-100

7/15/2019 5:00 PM

WB&A
Wozny/Barbar & Associates, Inc.
CONSULTING ENGINEERS
1076 Washington Street
Hanover, MA 02339
Tel: (781) 826-4144
Fax: (781) 924-5792
www.wbaengineers.com
161 Exchange Street
3rd Floor
Pawtucket, RI 02860

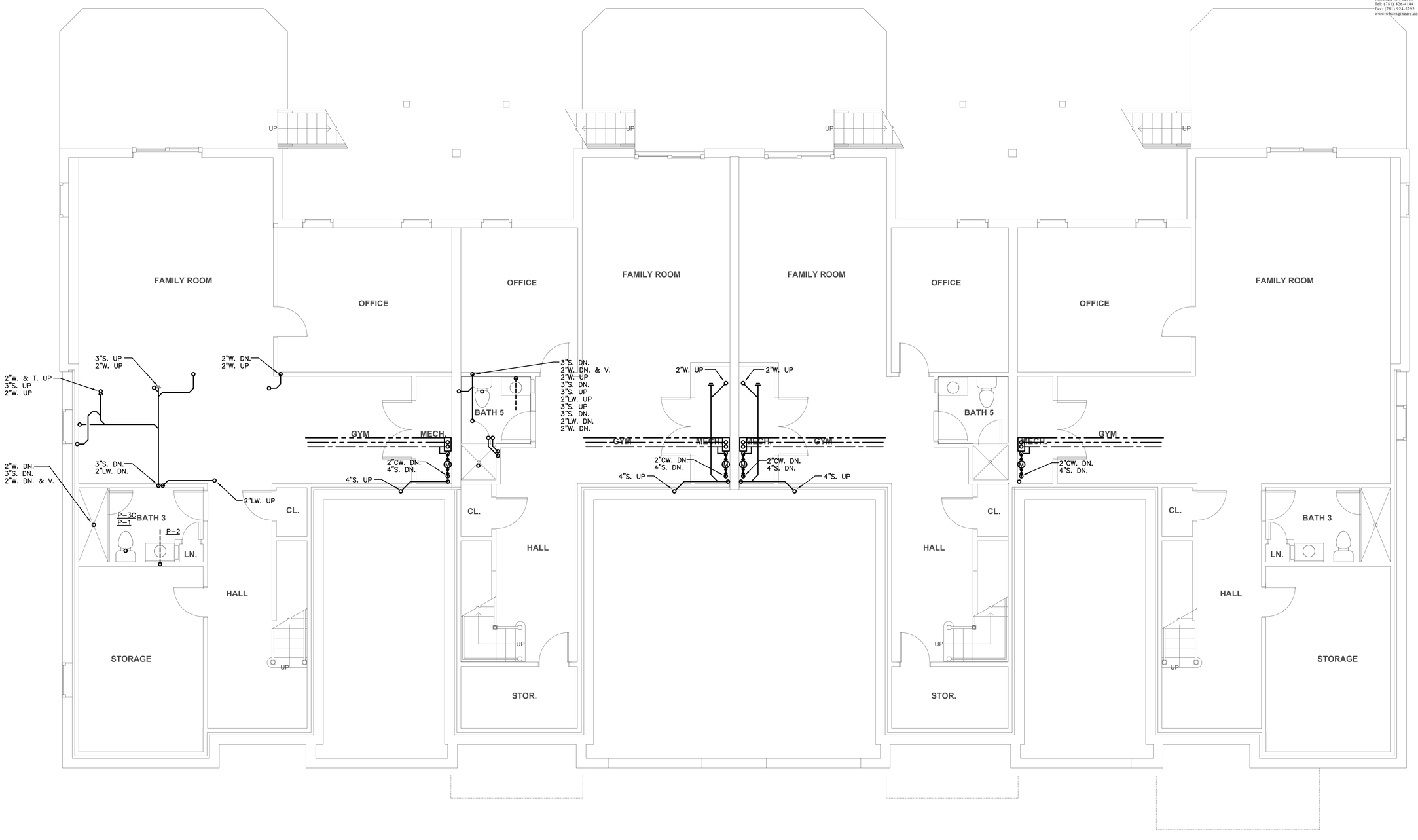

Date issued:

07.15.19

WINSLOW ARCHITECTS INC

89 MASSACHUSETTS AVE.
ARLINGTON, MA 02474

P: 781 648.6600
F: 781 648.6601

www.winslowarchitects.com

Owner/Developer:

MEDFIELD GREEN LLC.

Project:

MEDFIELD GREEN

Drawing:

Plumbing Building H - Basement Plan

Revisions:

No.	Description	Date

Stamp:

ANY REPRODUCTION, POSSESSION OR USE OF THIS DRAWING WITHOUT THE WRITTEN PERMISSION OF WINSLOW ARCHITECTS INC. IS PROHIBITED. VIOLATORS WILL BE PROSECUTED TO THE FULL EXTENT OF THE LAW.

© 2019 WINSLOW ARCHITECTS, INC.

Project number:

16-515

Sheet:

P-H-101

7/15/2019 5:00 PM

WB&A
Wozny/Barbar & Associates, Inc.
CONSULTING ENGINEERS
1076 Washington Street
Hanover, MA 02339
Tel: (781) 826-4144
Fax: (781) 924-5792
www.wbaengineers.com
161 Exchange Street
3rd Floor
Pawtucket, RI 02860

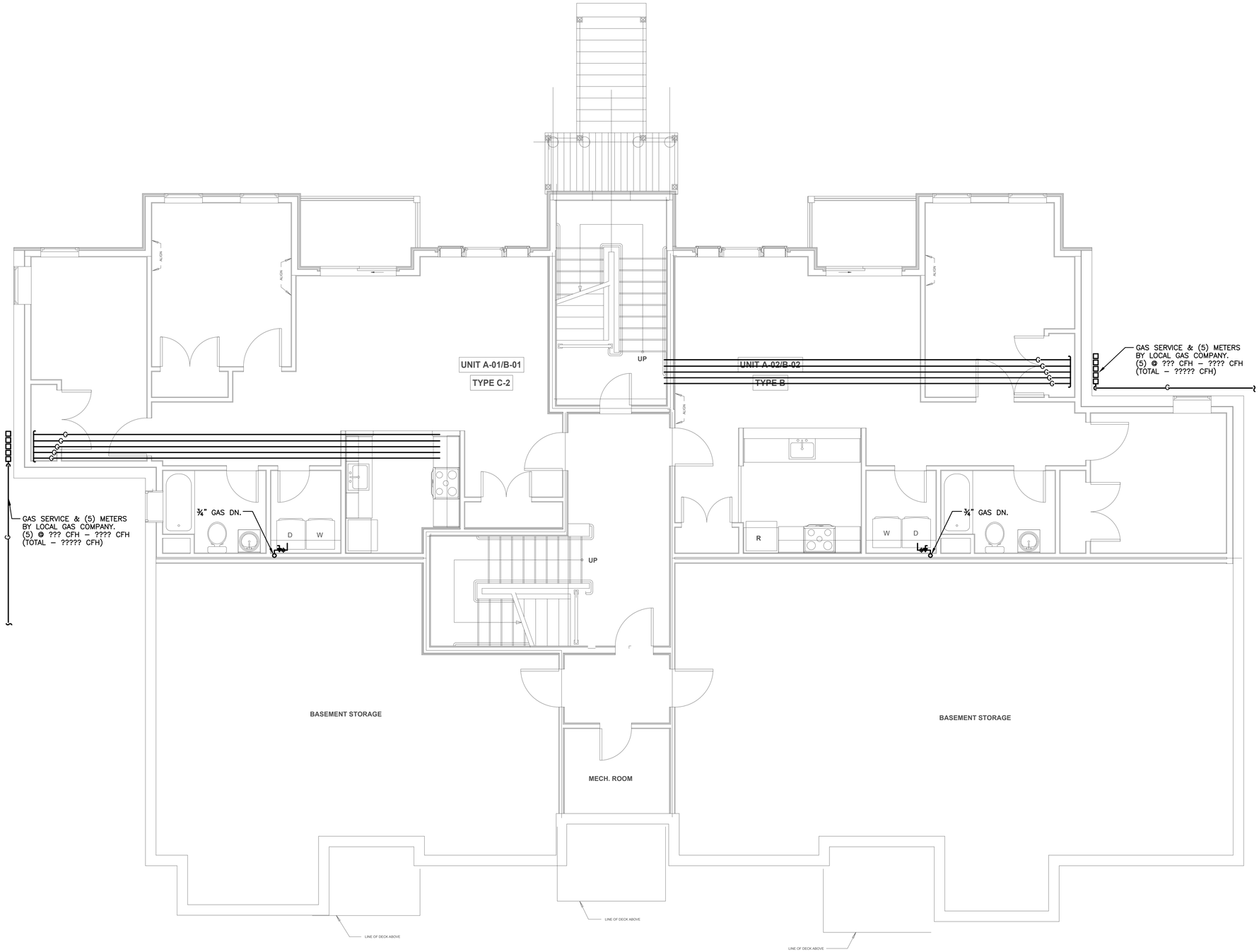

1 BASEMENT
1/4" = 1'-0"

Date issued:

07.15.19

WINSLOW ARCHITECTS INC

89 MASSACHUSETTS AVE.
ARLINGTON, MA 02474

P: 781 648.6600
F: 781 648.6601

www.winslowarchitects.com

Owner/Developer:

MEDFIELD GREEN LLC.

Project:

MEDFIELD GREEN

Drawing:

Plumbing Gas Building A & B - Basement Floor Plan

Revisions:

No.	Description	Date

Stamp:

ANY REPRODUCTION, POSSESSION OR USE OF THIS DRAWING WITHOUT THE WRITTEN PERMISSION OF WINSLOW ARCHITECTS INC. IS PROHIBITED. VIOLATORS WILL BE PROSECUTED TO THE FULL EXTENT OF THE LAW.

© 2019 WINSLOW ARCHITECTS, INC.

Project number:

16-515

Sheet:

P-AB-201

7/15/2019 5:01 PM

WB&A
Wozny/Barbar & Associates, Inc.
CONSULTING ENGINEERS
1076 Washington Street
Hanover, MA 02339
Tel: (781) 826-4144
Fax: (781) 924-5792
www.wbaengineers.com
161 Exchange Street
3rd Floor
Pawtucket, RI 02860

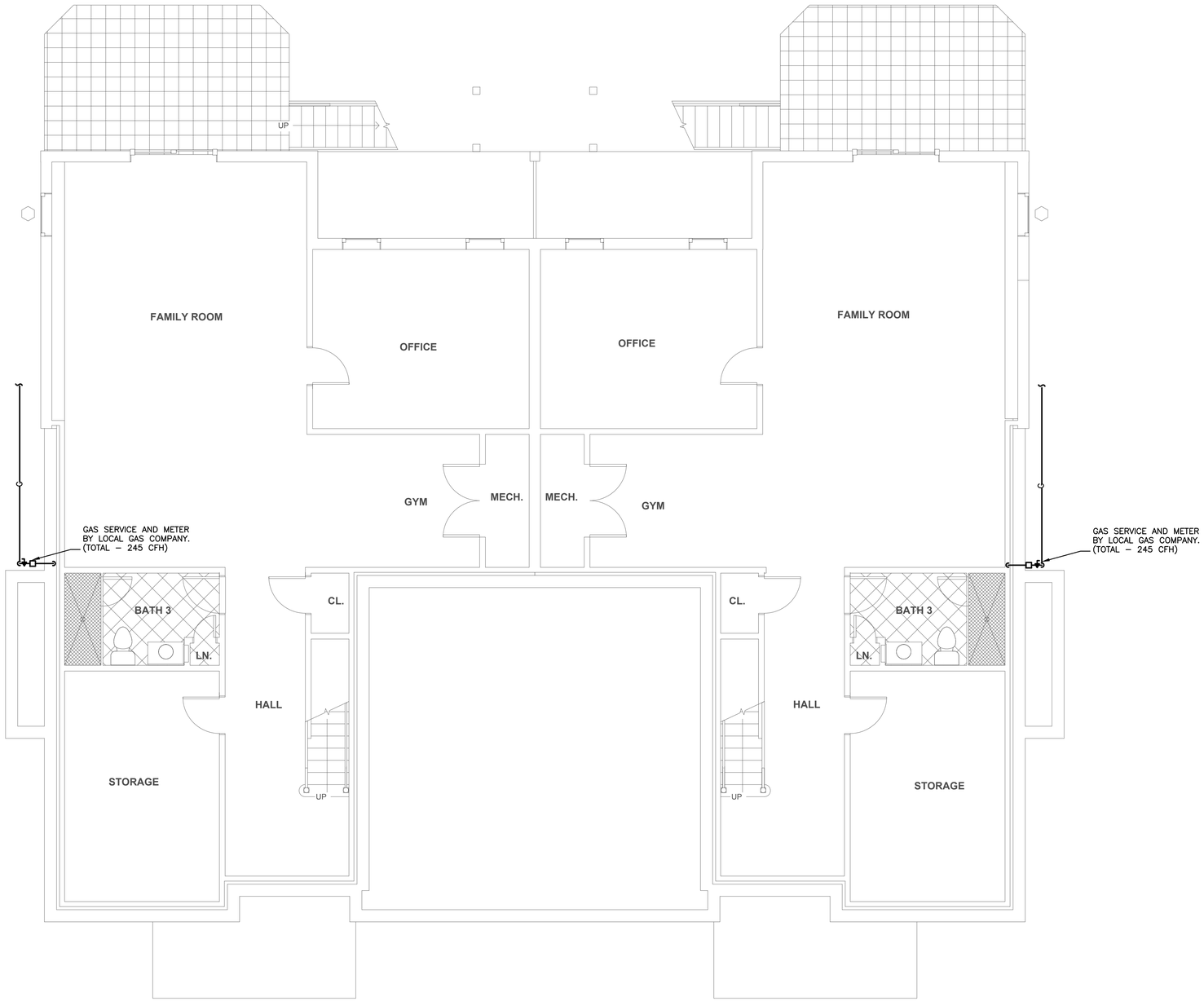

Date issued:

07.15.19

WINSLOW ARCHITECTS INC

89 MASSACHUSETTS AVE.
ARLINGTON, MA 02474

P: 781 648.6600
F: 781 648.6601

www.winslowarchitects.com

Owner/Developer:

MEDFIELD GREEN LLC.

Project:

MEDFIELD GREEN

Drawing:

Plumbing Gas Building E Basement Floor Plan

Revisions:

No.	Description	Date

Stamp:

ANY REPRODUCTION, POSSESSION OR USE OF THIS DRAWING WITHOUT THE WRITTEN PERMISSION OF WINSLOW ARCHITECTS INC. IS PROHIBITED AND VIOLATORS WILL BE PROSECUTED TO THE FULL EXTENT OF THE LAW.

© 2019 WINSLOW ARCHITECTS, INC.

Project number:

16-515

Sheet:

P-E-201

7/15/2019 5:01 PM

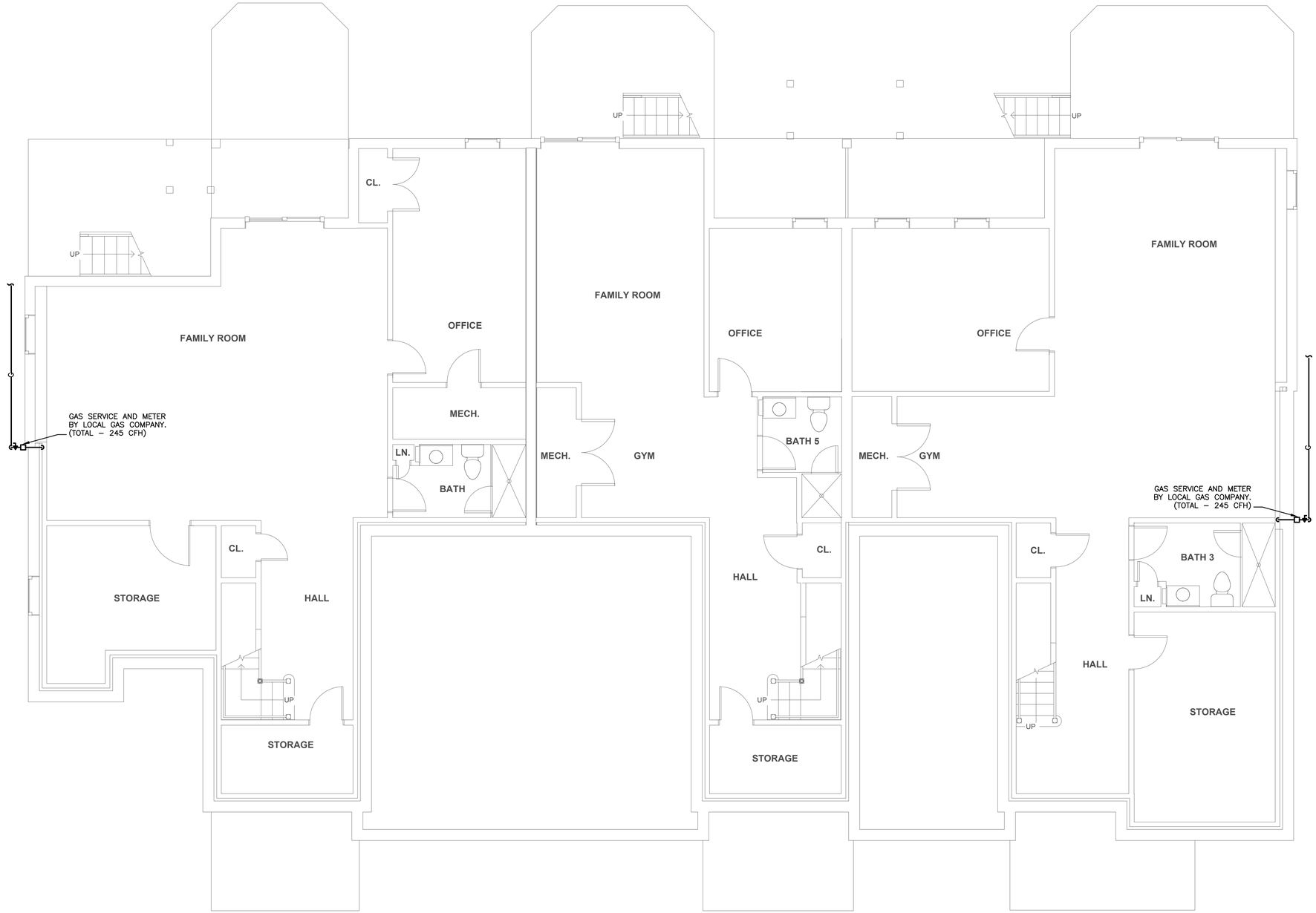

WB&A
Wozny/Barbar & Associates, Inc.
CONSULTING ENGINEERS
1076 Washington Street
Hanover, MA 02339
Tel: (781) 826-4144
Fax: (781) 924-5792
www.wbaengineers.com
161 Exchange Street
3rd Floor
Pawtucket, RI 02860

Date issued:

07.15.19

WINSLOW ARCHITECTS INC

89 MASSACHUSETTS AVE.
ARLINGTON, MA 02474

P: 781 648.6600
F: 781 648.6601

www.winslowarchitects.com

Owner/Developer:

MEDFIELD GREEN LLC.

Project:

MEDFIELD GREEN

Drawing:

Plumbing Gas Building F Basement Floor Plan

Revisions:

No.	Description	Date

Stamp:

ANY REPRODUCTION, POSSESSION OR USE OF THIS DRAWING WITHOUT THE WRITTEN PERMISSION OF WINSLOW ARCHITECTS INC. IS PROHIBITED. VIOLATORS WILL BE PROSECUTED TO THE FULL EXTENT OF THE LAW.

© 2019 WINSLOW ARCHITECTS, INC.

Project number:

16-515

Sheet:

P-F-201

7/15/2019 5:01 PM

WB&A
Wozny/Barbar & Associates, Inc.
CONSULTING ENGINEERS
1076 Washington Street
Hanover, MA 02339
Tel: (781) 826-4144
Fax: (781) 924-5792
www.wbaengineers.com
161 Exchange Street
3rd Floor
Pawtucket, RI 02860

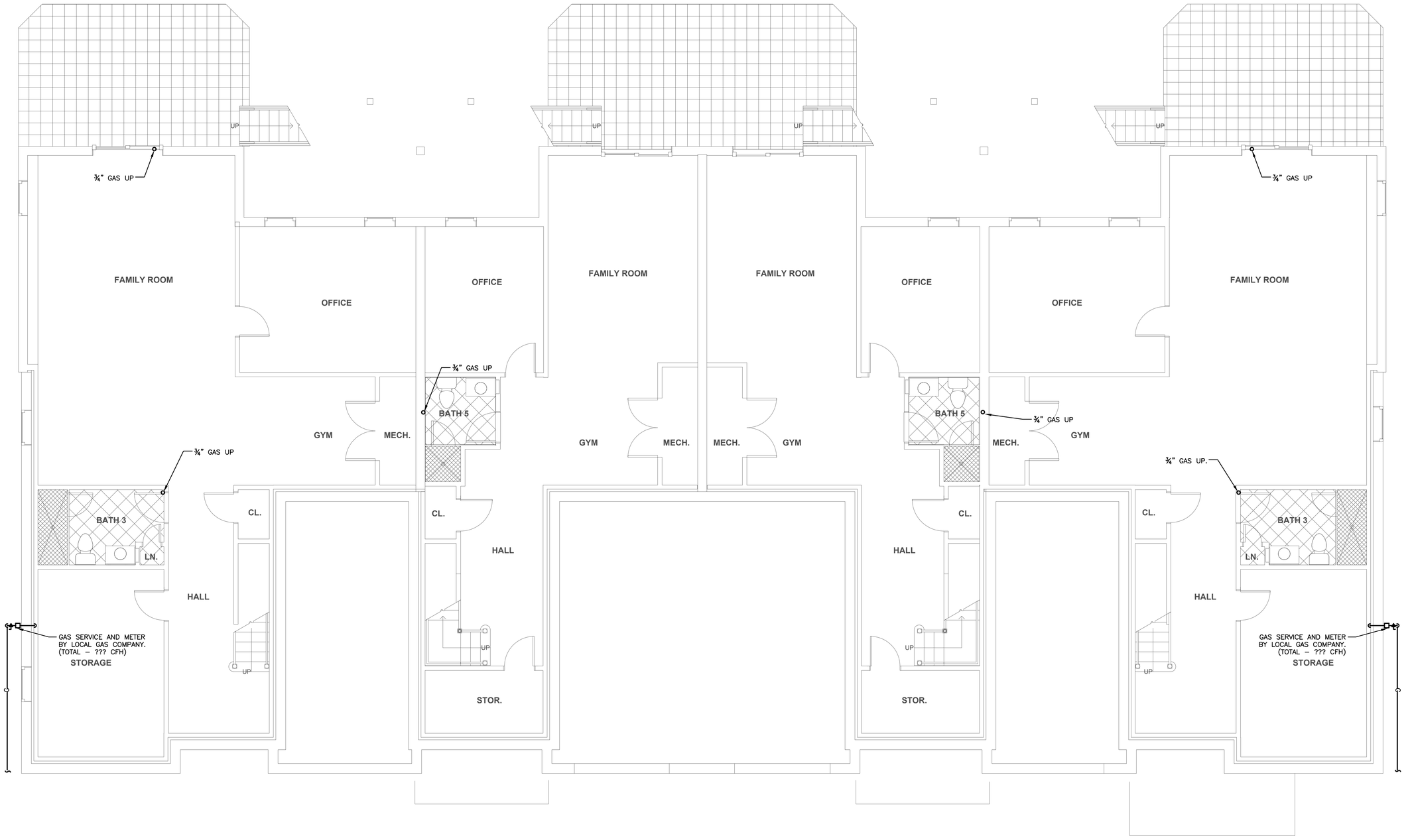

Date issued:

07.15.19

WINSLOW ARCHITECTS INC

89 MASSACHUSETTS AVE.
ARLINGTON, MA 02474

P: 781 648.6600
F: 781 648.6601

www.winslowarchitects.com

Owner/Developer:

MEDFIELD GREEN LLC.

Project:

MEDFIELD GREEN

Drawing:

Plumbing Gas Building H Basement Floor Plan

Revisions:

No.	Description	Date

Stamp:

ANY REPRODUCTION, POSSESSION OR USE OF THIS DRAWING WITHOUT THE WRITTEN PERMISSION OF WINSLOW ARCHITECTS INC. IS PROHIBITED. VIOLATORS WILL BE PROSECUTED TO THE FULL EXTENT OF THE LAW.

© 2019 WINSLOW ARCHITECTS, INC.

Project number:

16-515

Sheet:

P-H-201

7/15/2019 5:01 PM

WB&A
Wozny/Barbar & Associates, Inc.
CONSULTING ENGINEERS
1076 Washington Street
Hanover, MA 02339
Tel: (781) 826-4144
Fax: (781) 924-5792
www.wbassociates.com
161 Exchange Street
3rd Floor
Pawtucket, RI 02860

HVAC GENERAL NOTES

1. THE FOLLOWING NOTES ARE GENERAL IN NATURE. IF A CONFLICT OCCURS BETWEEN THESE NOTES AND THE SPECIFICATIONS, THE MORE STRINGENT SHALL APPLY.
2. EXAMINE ALL DRAWINGS AND THE SPECIFICATION FOR THE WORK REQUIREMENTS OF THIS SECTION.
3. HVAC WORK IS INDICATED DIAGRAMMATICALLY. EXACT LOCATIONS OF ALL COMPONENTS SHALL BE DETERMINED IN THE FIELD AND BY ACTUAL BUILDING CONDITIONS. EQUIPMENT OR DUCTS INTERFERING WITH OTHER INSTALLATIONS SHALL BE RELOCATED AS REQUIRED AT NO ADDITIONAL COST TO THE OWNER. THERMOSTAT LOCATIONS SHALL BE APPROVED BY THE ARCHITECT BEFORE THE INSTALLATION.
4. ALL THERMOSTATS SHALL BE FED WITH CONCEALED WIRES AND LOCATED IN THE FIELD BY THE ARCHITECT PRIOR TO ANY CUTTING AND PATCHING.
5. ALL WORK SHALL MEET OR EXCEED THE LATEST REQUIREMENTS OF ALL NATIONAL, STATE, COUNTRY MUNICIPAL AND OTHER AUTHORITIES EXERCISING JURISDICTION OVER CONSTRUCTION WORK OF THE PROJECT. ALL REQUIRED PERMITS SHALL BE OBTAINED, PAID FOR, AND MADE AVAILABLE AT THE COMPLETION OF THE WORK.
6. INSTALLATION PROCEDURES, METHODS, AND CONDITIONS SHALL COMPLY WITH THE LATEST REQUIREMENTS OF THE FEDERAL OCCUPATIONAL SAFETY AND HEALTH ACT (OSHA).
7. THE HVAC CONTRACTOR SHALL GUARANTEE WORK IN WRITING FOR ONE YEAR FROM DATE OF FINAL ACCEPTANCE AGAINST DEFECTS IN MATERIALS, WORKMANSHIP AND INSTALLATION. THE HVAC CONTRACTOR SHALL CORRECT DEFECTIVE WORK AT NO ADDITIONAL COST TO THE OWNER AND PROVIDE EQUIPMENT WARRANTIES TO THE OWNER IN FULL FORCE. PROVIDE 5-YEAR WARRANTY ON COMPRESSORS.
8. PRIOR TO PURCHASING ANY EQUIPMENT OR MATERIALS, THE PRODUCT DATA SHALL BE SUBMITTED FOR REVIEW. ALL EQUIPMENT AND MATERIALS SHALL BE NEW AND WITHOUT BLEMISH OR DEFECT. SUBSTITUTED EQUIPMENT OR OPTIONAL EQUIPMENT WHERE PERMITTED AND APPROVED, MUST CONFORM TO SPACE REQUIREMENTS. ANY SUBSTITUTED EQUIPMENT THAT CANNOT MEET SPACE REQUIREMENTS, WHETHER APPROVED OR NOT, SHALL BE REPLACED AT THE CONTRACTOR'S EXPENSE.
9. THE HEATING, VENTILATING AND AIR CONDITIONING TRADE IS REQUIRED TO SUPPLY ALL NECESSARY SUPERVISION AND COORDINATION INFORMATION TO ANY OTHER TRADES WHO ARE TO SUPPLY WORK TO ACCOMMODATE THE HEATING, VENTILATING AND AIR CONDITIONING INSTALLATIONS. WORK SHALL BE PERFORMED IN COOPERATION WITH OTHER TRADES ON THE PROJECT AND SO SCHEDULED AS TO ALLOW SPEEDY AND EFFICIENT COMPLETION OF THE PROJECT.
9. CUTTING, CORING, DRILLING AND PATCHING OF HOLES AND OPENINGS IN ALL THE STRUCTURAL WALLS FOR THE WORK OF SUB-TRADES SHALL BE PERFORMED BY THE PARTICULAR SUBCONTRACTOR WHEN THE LARGEST DIMENSION OF THE OPENING IS 4 INCHES OR LESS. IF THE LARGEST DIMENSION OF THE OPENING EXCEEDS 4 INCHES, THE GENERAL CONTRACTOR SHALL PERFORM THE CUTTING AND PATCHING FOR THE WORK OF THE SUBCONTRACTOR. ALL SUCH WORK SHALL BE COORDINATED WITH THE G.C.
10. PROVIDE 6-INCH TALL CONCRETE PADS FOR CONDENSING UNITS AND OTHER OUTDOOR EQUIPMENT. PROVIDE STEEL PLATFORMS AND SUPPORTS AS REQUIRED TO COMPLETE SAFE AND CODE-COMPLIANT SYSTEM INSTALLATION.
11. ALL WORK SHALL BE INSTALLED SO THAT PARTS REQUIRING PERIODIC INSPECTION, OPERATION, MAINTENANCE AND REPAIR ARE READILY ACCESSIBLE. MINOR DEVIATION FROM THE DRAWINGS MAY BE MADE TO ACCOMPLISH THIS, BUT CHANGES OF SUBSTANTIAL MAGNITUDE SHALL NOT BE MADE PRIOR TO WRITTEN APPROVAL FROM THE ENGINEER.
12. THE DRAWINGS ARE DIAGRAMMATIC. THE CONTRACTOR SHALL REVIEW EQUIPMENT INSTALLATION MANUAL TO UNDERSTAND THE EQUIPMENT SERVICE SPACE REQUIRED BEFORE WORK IS COMMENCED. THIS CONTRACTOR SHALL COORDINATE LOCATION OF ACCESS PANELS IN CEILINGS, WALLS, FLOORS ETC WITH GC. AND THE ARCHITECT. THE PANELS SHALL BE FURNISHED BY HVAC CONTRACTOR AND INSTALLED BY GC.
13. THIS TRADE SHALL COORDINATE DUCT AND EQUIPMENT INSTALLATION WITH EXISTING EQUIPMENT, DUCTS, AND PIPING. THIS TRADE SHALL COORDINATE ALL CONFLICTS WITH OTHER TRADES IN THE FIELD PRIOR TO INSTALLATION AT NOT EXTRA COST TO THE OWNER.
14. THE AIR HANDLING UNITS SHALL BE PROVIDED WITH SECONDARY CONDENSATE DRAINS AS REQUIRED BY THE INTERNATIONAL MECHANICAL CODE (IMC), SECTION 307. EACH SECONDARY DRAIN PAN SHALL BE PROVIDED WITH A CONDENSATE OVERFLOW SWITCH. THE SWITCH SHALL SHUT OFF THE UNIT IN THE EVENT THAT PRIMARY DRAIN IS BLOCKED.
15. REFER TO ARCHITECTS DRAWINGS FOR THERMOSTAT MOUNTING HEIGHTS.
16. REFER TO THE MECHANICAL SCHEDULES FOR EQUIPMENT REQUIRING ELECTRICAL STANDY-BY POWER. ALL EQUIPMENT ON STAND-BY POWER WILL NOT REQUIRE ANY MANUAL RESTART INCLUDING BUT NOT LIMITED TO PILOT LIGHTS, CONTROLS (BMS), SENSORS, ETC.
17. VENT ALL THE GAS-FIRED AIR-HANDLERS TO THE ROOF. USE 3"ø PVC INTAKE PIPES AND 3"ø CPVC FLUE PIPES. TERMINATE ALL THE PIPES WITH CONCENTRIC VENT FITTINGS. THE TOP OF THE CONCENTRIC VENT FITTING SHALL TERMINATE ABOVE THE SNOW ACCUMULATION LINE.

ADD ALTERNATES

1. THE CURRENT DESIGN CALLS FOR A NATURALLY VENTILATED ATTIC SPACE. PLEASE SUBMIT AN ADD ALTERNATE PRICING FOR PROVIDING A MECHANICALLY VENTILATED ATTIC SYSTEM INCLUDING LOUVERS, IN-LINE EXHAUST FANS, MOTORIZED DAMPERS, EXHAUST DUCTWORK, AND GRAVITY INTAKE HOOD FOR MAKE-UP AIR COMPLETE WITH MOTORIZED DAMPERS. REFER TO THE SCHEDULES AND ATTIC DRAWINGS FOR ADDITIONAL INFORMATION.

HVAC Equipment Designations

SYMBOL	DESCRIPTION
	EQUIPMENT TAG DESIGNATION NOTE: THE HEXAGON SYMBOL SHALL BE USED FOR ALL EQUIPMENT CALLOUTS REQUIRING ELECTRICAL POWER HOOK-UP.
	EQUIPMENT TAG DESIGNATION/ACTIVE LENGTH FOR FIN-TUBE NOTE: THE SQUARE SYMBOL SHALL BE USED FOR ALL EQUIPMENT CALLOUTS THAT DO NOT REQUIRE ELECTRICAL POWER.
	EQUIPMENT TAG CFM AMOUNT NECK SIZE NOTE: THE SQUARE SYMBOL SHALL BE USED FOR ALL EQUIPMENT CALLOUTS THAT DO NOT REQUIRE ELECTRICAL POWER.
	RISER TAG DESIGNATION

HVAC Ductwork Symbols & Abbreviations

SYMBOL	DESCRIPTION
EWT	ENTERING WATER TEMPERATURE
EXH	EXHAUST
FLA	FULL LOAD AMPS
FLR	FLOOR
FPM	FEET PER MINUTE
GC	GENERAL CONTRACTOR
GPM	GALLONS PER MINUTE
HEX	HEAT EXCHANGER
HP	HEAT PUMP/HORSE POWER
HWR	HOT WATER RETURN
HWS	HOT WATER SUPPLY
ID	INSIDE DIAMETER
LAT	LEAVING AIR TEMPERATURE
LD	LINEAR DIFFUSER
LVG	LEAVING
LWT	LEAVING WATER TEMPERATURE
MBH	THOUSAND BTU PER HOUR
MAU	MAKE-UP AIR UNIT
NO	NORMALLY OPEN (FAIL POSITION)
NTS	NOT TO SCALE
OA	OUTSIDE AIR
OBD	OPPOSED BLADE DAMPER
OD	OUTSIDE DIAMETER
P	PUMP
PC	PLUMBING CONTRACTOR
PD	PRESSURE DROP
PSI	POUNDS PER SQUARE INCH
RG	RETURN GRILLE
RPM	REVOLUTIONS PER MINUTE
SP	STATIC PRESSURE (INCHES OF WATER)
SR	SUPPLY REGISTER
RTU	ROOFTOP UNIT
TG	TRANSFER GRILLE
TYP	TYPICAL
WB	WET-BULB TEMPERATURE °F
WMS	WIRE MESH SCREEN

HVAC Ductwork Symbols & Abbreviations

SYMBOL	DESCRIPTION
	NEW PIPING, DUCTWORK, EQUIPMENT, ETC. (LINE WEIGHT)
	LINED DUCTWORK
	EXISTING PIPING, DUCTWORK, EQUIPMENT, ETC. (LINE WEIGHT)
	EXISTING PIPING, DUCTWORK, EQUIPMENT, ETC. (TO BE REMOVED)
	CONNECT NEW TO EXISTING
	SUPPLY/OUTSIDE AIR DUCT UP
	RETURN/EXHAUST DUCT UP
	SUPPLY/OUTSIDE AIR DUCT DOWN
	RETURN/EXHAUST DUCT DOWN
	EXHAUST DUCT UP
	SUPPLY DIFFUSER
	RETURN/EXHAUST REGISTER
FD	FIRE DAMPER
FSD	COMBINATION FIRE DAMPER/SMOKE DAMPER
VD	MANUAL VOLUME DAMPER
MD	MOTORIZED DAMPER
Z	ZONE DAMPER
H	HUMIDISTAT
S	SWITCH SERVING FAN
T	THERMOSTAT
R	REMOTE AVERAGING THERMOSTAT
R	REVERSE ACTING THERMOSTAT
T_S	REMOTE TEMPERATURE SENSOR W/ UNIT
	UNDER CUT DOOR
	LOUVERED DOOR
C	THERMOSTAT/CONTROLLER
AFF	ABOVE FINISHED FLOOR
AS	AIR SEPARATOR
B	BOILER
BHP	BRAKE HORSEPOWER
BTU	BRITISH THERMAL UNIT
BTUH	BRITISH THERMAL UNIT PER HOUR
CD	CEILING DIFFUSER/CONDENSATE
CFM	CUBIC FEET PER MINUTE
CO	CLEANOUT
CT	COOLING TOWER
CUH	CABINET UNIT HEATER
C/W	COMPLETE WITH
CWR	CHILLED WATER RETURN
CWS	CHILLED WATER SUPPLY
DB	DRY BULB TEMPERATURE °F
DN	DOWN
EA	EXHAUST AIR
EF	EXHAUST FAN
EG	EXHAUST GRILLE
ER	EXHAUST REGISTER
ET	EXPANSION TANK

HVAC Piping Symbols

SYMBOL	DESCRIPTION
CWS	CONDENSER WATER SUPPLY
CWR	CONDENSER WATER RETURN
HWS	HOT WATER SUPPLY
HWR	HOT WATER RETURN
CD	CONDENSATE DRAIN
	DIRECTION OF DOWNWARD PITCH 1/8"/FOOT
	DIRECTION OF FLOW
	ELBOW TURNED DOWN
	ELBOW TURNED UP
	BALL VALVE
	BALL VALVE WITH MEMORY STOP
	BALL DRAIN VALVE WITH HOSE BIB, CAP & CHAIN
	GATE VALVE
	ANGLE VALVE (SHOWN IN SECTION DWGS)
	ANGLE VALVE (SHOWN ON DWG PLANS)
	BUTTERFLY VALVE
	BUTTERFLY VALVE WITH MEMORY STOP
	GLOBE VALVE
	CHECK VALVE
	LUBRICATED PLUG VALVE
	THERMOSTATIC CONTROL VALVE
	TWO-WAY AUTOMATIC CONTROL VALVE
	THREE-WAY AUTOMATIC CONTROL VALVE
	PRESSURE REDUCING VALVE
	MANUAL AIR VENT
	AUTOMATIC AIR VENT WITH ISOLATION VALVE
	THERMOMETER
	PRESSURE GAUGE WITH BALL VALVE
	TEMPERATURE/PRESSURE WELL ("PETE'S PLUG")
	COMBINATION FLOW METER/BALANCE VALVE & SHUT-OFF (CIRCUIT SETTER)
	PIPE GUIDE
	PIPE ANCHOR
	REDUCER (ECCENTRIC-FOB OR FOT)
	REDUCER (CONCENTRIC)
	UNION-SCREWED
	BLIND FLANGE (END OF SYSTEM)
	END CAP-SCREWED
	TOP TAKE-OFF
	BOTTOM TAKE-OFF
	DIRT LEG
	FLEXIBLE CONNECTION (SINGLE LINE PIPING)
	FLEXIBLE CONNECTION (DOUBLE LINE PIPING)
	VIBRATION ISOLATORS FLOOR MOUNTED & HANGING TYPE

Date issued:

07.15.19

WINSLOW ARCHITECTS INC

89 MASSACHUSETTS AVE.
ARLINGTON, MA 02474

P: 781 648.6600
F: 781 648.6601

www.winslowarchitects.com

Owner/Developer:

MEDFIELD GREEN LLC.

Project:

MEDFIELD GREEN

Drawing:

Mechanical Legend & General Notes

Revisions:

No.	Description	Date

Stamp:

ANY REPRODUCTION, POSSESSION OR USE OF THIS DRAWING WITHOUT THE WRITTEN PERMISSION OF WINSLOW ARCHITECTS INC. IS PROHIBITED. VIOLATORS WILL BE PROSECUTED TO THE FULL EXTENT OF THE LAW.

© 2019 WINSLOW ARCHITECTS, INC.

Project number:

16-515

Sheet:

M-001

7/17/2019 10:30 AM

FAN–COIL UNIT SCHEDULE/AIR–COOLED CONDENSING UNITS (ECM MOTOR)

SYMBOL	SERVICE	SUPPLY FAN			HOT WATER HEATING @ 140 °F EWT		DX COOLING (MBH)		MANUFACTURER & MODEL NUMBER	ELECTRICAL DATA					REFRIGERANT	AIR–COOLED CONDENSING UNITS								REMARKS
		AIRFLOW (CFM)	ESP (IN. WC)	MOTOR (HP)	MBH	GPM	TOTAL	SENSIBLE		V	PH	HZ	MCA	MOCP		SYMBOL	MANUFACTURER & MODEL NUMBER	VOLTS	PHASE	HZ	MCA	MOCP	SEER	
FCU–1	SEE PLANS	633	0.40"	1/5	30.4	3.5	17.5	13.1	ASPEN AFW18–UC3SP	120	1	60	4.1	15	R–410	ACCU–1	CARRIER 24ACA418C30	208	1	60	11.7	15	15.0	①②③④⑤⑥⑦⑧⑨⑩
FCU–2	SEE PLANS	663	0.40"	1/5	34.8	3.5	23.6	17.7	ASPEN AFW24–UC3SP	120	1	60	4.1	15	R–410	ACCU–2	CARRIER 24ACA424C30	208	1	60	17.5	25	15.0	①②③④⑤⑥⑦⑧⑨⑩
FCU–3	SEE PLANS	870	0.40"	1/3	40.1	3.5	27.6	20.7	ASPEN AFW36–UC3SP	120	1	60	7.4	15	R–410	ACCU–3	CARRIER 24ACA430C30	208	1	60	18.8	30	15.0	①②③④⑤⑥⑦⑧⑨⑩
FCU–4	SEE PLANS	1130	0.40"	1/3	43.0	3.5	32.6	24.4	ASPEN AFW36–UC4SP	120	1	60	7.4	15	R–410	ACCU–4	CARRIER 24ACA436C30	208	1	60	22.0	35	15.0	①②③④⑤⑥⑦⑧⑨⑩

① UNITS SHALL BE PROVIDED WITH A DISCONNECT SWITCH.
② UNITS SHALL BE PROVIDED W/ ALL NECESSARY CONTROLS.
③ UNITS SHALL BE PROVIDED TWO SETS OF FILTERS.
④ UNITS SHALL BE PROVIDED WITH PROGRAMMABLE THERMOSTATS, AS MANUFACTURED BY NEST.
⑤ UNITS SHALL BE PROVIDED SECONDARY CONDENSATE DRAIN PAN WITH OVERFLOW SWITCH FOR ALL FAN COIL UNITS.
⑥ UNITS SHALL BE PROVIDED COMPLETE CONDENSATE SYSTEM AND RUN TO NEAREST FLOOR DRAIN.
⑦ THE ACCU'S SHALL BE PROVIDED WITH CORROSION–PROTECTIVE SUITABLE FOR COASTAL APPLICATIONS.
⑧ UNITS SHALL BE PROVIDED WITH HYDRONIC HEAT KIT, INCLUDING TACO 008 CIRCULATION PUMP & TIMER.
⑨ UNITS SHALL BE PROVIDED WITH AN OVERSIZED ACCESS PANEL WHICH IS COMPLETELY SOLID. SECURE 1" THICK INSULATION TO THE PANEL FOR SOUND ATTENUATION PURPOSES.
⑩ UNITS SHALL BE PROVIDED WITH A TXV VALVE SIZED FOR APPROPRIATE AIR COOLED CONDENSING UNIT.

DIFFUSER, REGISTER & GRILLE SCHEDULE

SYMBOL	LISTED SIZE	NECK SIZE	CFM RANGE		OVERALL SIZE	SERVICE	VOLUME CONTROL DAMPER	MANUFACTURER & MODEL NO.	REMARKS
			MIN.	MAX.					
CD–#	SEE DWG'S	SEE DWG'S	SEE DWG'S	–	SEE DWG'S	SUPPLY	YES	TITUS TDCA SERIES	① ② ③ ④ ⑤ ⑥
SR–1	SEE DWG'S	SEE DWG'S	SEE DWG'S	–	SEE DWG'S	SUPPLY	YES	TITUS 272FL SERIES	② ③ ④ ⑤ ⑥
RG–1	SEE DWG'S	SEE DWG'S	SEE DWG'S	–	SEE DWG'S	RETURN	YES	TITUS PAR SERIES	② ③ ④ ⑤ ⑥
RR–1	SEE DWG'S	SEE DWG'S	SEE DWG'S	–	SEE DWG'S	RETURN	YES	TITUS 25RL SERIES	② ③ ④ ⑤ ⑥
RR–2	SEE DWG'S	SEE DWG'S	SEE DWG'S	–	SEE DWG'S	RETURN	YES	TITUS 33RFL SERIES	② ③ ④ ⑤ ⑥
EG–1	SEE DWG'S	SEE DWG'S	SEE DWG'S	–	SEE DWG'S	EXHAUST	YES	TITUS 4FL SERIES	② ③ ④ ⑤ ⑥
ER–1	SEE DWG'S	SEE DWG'S	SEE DWG'S	–	SEE DWG'S	EXHAUST	YES	TITUS 4FL SERIES	② ③ ④ ⑤ ⑥
TG–1	SEE DWG'S	SEE DWG'S	SEE DWG'S	–	SEE DWG'S	TRANSFER	YES	TITUS 25RL SERIES	② ③ ④ ⑤ ⑥ ⑦
TR–1	SEE DWG'S	SEE DWG'S	SEE DWG'S	–	SEE DWG'S	TRANSFER	YES	TITUS 25RL SERIES	② ③ ④ ⑤ ⑥ ⑦

① # DENOTES THE BLOW PATTERN.
② ALL DIFFUSER & REGISTERS SHALL BE SUPPLIED WITH BORDER TO SUIT ACTUAL INSTALLATION (I.E. T–BAR CEILING, SURFACE MOUNT IN GYPSUM WALL OR CEILING OR DUCT MOUNTING).
③ ALL SUPPLY DIFFUSERS AND REGISTERS SHALL BE SUPPLIED WITH A VOLUME CONTROL DAMPER ACCESSIBLE THROUGH THE DIFFUSER.
④ ALL DIFFUSERS AND GRILLES PENETRATING A FIRE–RATED ASSEMBLY SHALL BE SUPPLIED WITH A SUITABLE FIRE DAMPER. FIRE DAMPER SHALL BE ABLE TO BE RESET THROUGH THE DIFFUSER/GRILLE OPENING.
⑤ REFER TO THE ARCHITECTS DRAWINGS FOR THE FINAL LOCATIONS OF ALL DIFFUSERS, REGISTERS, AND GRILLES.
⑥ THE COLOR AND STYLE OF ALL DIFFUSERS, REGISTERS, AND GRILLES SHALL BE APPROVED BY THE ARCHITECT AND OWNER.
⑦ ALL TRANSFER GRILLES SHALL BE OVERSIZED TO ALLOW FOR AIRFLOW VELOCITY AT 400 FPM.

FAN SCHEDULE

UNIT NO.	LOCATION	SYSTEM SERVED	FAN TYPE	AIR QUANTITY		EXTERNAL STATIC PRESS. IN H_2O	SPEED		ELECTRICAL DATA				MANUFACTURER & MODEL NO.	REMARKS
				MAX	MIN		QUANT	MAX RPM	(WATTS) HP	V	PH	HZ		
EF–1	SEE DWGS	BATHROOM EXHAUST	CEILING	80	30	0.25"	–	–	(6.0)	120	1	60	PANASONIC FV–0511VKSL2	①② ④⑤⑥
EF–2	SEE DWGS	GARAGE	CEILING	250	0	0.3	–	–	(225)	120	1	60	PANASONIC FV–30VQ3	①② ⑨
EF–3	SEE DWGS	COMMON AREAS	IN–LINE	380	0	0.30	–	1,725	1/10	120	1	60	GREENHECK SQ–090–VG	①②③④ ⑦⑧

① UNIT SHALL BE SUPPLIED WITH AN ELECTRICAL DISCONNECT. THE DISCONNECT SHALL BE PROVIDED BY THE ELECTRICAL CONTRACTOR.
② SEE DWGS FOR EXACT NUMBER OF UNITS.
③ THE UNIT SHALL BE SUPPLIED WITH DIRECT–DRIVE, VARI–GREEN ECM MOTOR, COMPLETE WITH A UNIT MOUNTED SPEED CONTROLLER.
④ EXHAUST FAN SHALL BE IN OPERATION 24/7.
⑤ THE FAN SHALL BE PROVIDED WITH A CEILING RADIATION DAMPER.
⑥ THE FAN SHALL BE PROVIDED WITH AN INTEGRAL LIGHT. THE FAN AND LIGHT SHALL BE ON THE SAME SWITCH. REFER TO THE ARCHITECTS DRAWINGS FOR THE FINAL LOCATION OF THE FAN.
⑦ UNIT SHALL BE PROVIDED WITH VIBRATION ISOLATORS.
⑧ UNIT SHALL BE PROVIDED WITH A LINE VOLTAGE MOTORIZED DAMPER COMPLETE WITH END SWITCH.
⑨ THE FAN SHALL BE WIRED TO A CO SENSOR WITHIN THE GARAGE. THE CO SENSOR SHALL SEND A SIGNAL TO ENERGIZE THE FAN.

ELECTRIC HEATER SCHEDULE

UNIT NO	LOCATION	MAXIMUM HEATING CAPACITY (MBH)	AIR			ELECTRICAL DATA					MANUFACTURER & MODEL NUMBER	REMARKS
			CFM	ENT F	LVG F	KW	AMPS	V	PH	HZ		
EWH–1	SEE DRAWINGS	13.65	–	60	–	4.0	19.2	208	1	60	QMARK SSHO4008	① ③
EWH–2	SEE DRAWINGS	1.71	65	60	–	0.50	1.8	120	1	60	QMARK CZ1012T	①②③
ECH–1	SEE DRAWINGS	5.12	–	60	–	1.5	7.2	208	1	60	QMARK EFF4004	①②③
EUH–1	SEE DRAWINGS	10.20	350	60	–	3.0	14.5	208	1	60	QMARK MUH03–81	①② ④

① THE UNIT SHALL BE PROVIDED WITH A DISCONNECT. THE DISCONNECT SHALL BE PROVIDED BY THE ELECTRICAL CONTRACTOR.
② THE UNIT SHALL BE PROVIDED WITH A REMOTE, WALL–MOUNTED THERMOSTAT, SIMILAR TO HONEYWELL MODEL YTL9160AR1000. PROVIDE A 120V LINE VOLTAGE RELAY IN THE UNIT. COORDINATE THE LOCATION OF THE REMOTE THERMOSTAT WITH THE ARCHITECT. THE THERMOSTAT SHALL COME WITH A KEYPAD LOCK.
③ THE UNIT SHALL BE PROVIDED WITH A SURFACE MOUNTING KIT.
④ THE UNIT SHALL BE PROVIDED WITH A HANGING KIT.
⑤ THE UNIT SHALL BE PROVIDED WITH A RECESSED TRIM KIT.

CONDENSATE PUMP SCHEDULE

SYMBOL	LOCATION	SERVICE	TANK CAPACITY	PUMP CAPACITY				ELECTRICAL DATA				BASED ON LITTLE GIANT MODEL #	REMARKS
				HP	GPH	HEAD FT	SHUT OFF FT	AMPS	V	PH	Hz		
CP–1	SEE PLANS	CONDENSATE REMOVAL	1/2 GAL.	1/50	50	10'	20'	1.0	120	1ø	60	VCMA–15ULS	SIX FOOT POWER CORD

① SCHEDULED PUMP IS PROVIDED WITH A SIX (6) FOOT POWER CORD. COORDINATE WITH ELECTRICAL CONTRACTOR TO PROVIDE DUPLEX RECEPTACLE AT EACH LOCATION.

PADDLE FAN SCHEDULE

SYMBOL	DESCRIPTION	DRIVE TYPE	FAN TYPE	CFM	ESP IN. WG.	WHEEL DIA. (MIN.)	RPM (MAX.)	MOTOR				OPER. WT. (LBS.)	MANUFACTURER & MODEL NO.	REMARKS
								HP.	V	Ø	HZ			
PF–1	SEE DWGS	DIRECT	CEILING	60,000	–	–	–	107.1 WATTS	115	1	60	–	EMERSON #HF1160BS	SEE NOTES BELOW
PF–2	SEE DWGS	DIRECT	CEILING	60,000	–	–	–	107.1 WATTS	115	1	60	–	EMERSON #HF1160BS	SEE NOTES BELOW

① ALL EXHAUST FANS SHALL BE BE SUPPLIED WITH A FACTORY SUPPLIED DISCONNECT.
② UNIT SHALL BE INSTALLED IN ACCORDANCE WITH THE UNIT MANUFACTURER RECOMENDATIONS.
③ SEE DRAWINGS FOR THE EXACT NUMBER OF FANS.
④ UNIT SHALL BE PROVIDED WITH A WALL MOUNTED 3 SPEED CONTROLLER.
⑤ CONFIRM SELECTION WITH ARCHITECT BEFORE PURCHASING ANY UNITS.
⑥ UNIT STYLE, COLOR, CONFIGURATION AND MOUNTING HEIGHTS SHALL BE APPROVED BY THE BUILDING OWNER AND ARCHITECT.
⑦ FINAL FAN MANUFACTURER & MODEL NO. SHALL BE APPROVED BY THE ARCHITECT.

WB&A
Wozny/Barbar & Associates, Inc.
CONSULTING ENGINEERS
1076 Washington Street, Hanover, MA 02339, Tel: (781) 826-4144, Fax: (781) 924-5792
161 Exchange Street, 3rd Floor, Pawtucket, RI 02860
www.wbaengineers.com

Date issued:

07.15.19

WINSLOW ARCHITECTS INC

89 MASSACHUSETTS AVE.
ARLINGTON, MA 02474

P: 781 648.6600
F: 781 648.6601

www.winslowarchitects.com

Owner/Developer:

MEDFIELD GREEN LLC.

Project:

MEDFIELD GREEN

Drawing:

Mechanical Schedules

Revisions:

No.	Description	Date

Stamp:

ANY REPRODUCTION, POSSESSION OR USE OF THIS DRAWING WITHOUT THE WRITTEN PERMISSION OF WINSLOW ARCHITECTS INC. IS PROHIBITED. VIOLATORS WILL BE PROSECUTED TO THE FULL EXTENT OF THE LAW.

© 2019 WINSLOW ARCHITECTS, INC.

Project number:

16-515

Sheet:

M-002

7/17/2019 10:30 AM

INDIRECT GAS FIRED FURNACE SCHEDULE

UNIT NO.	SUPPLY AIR CFM	FRESH AIR CFM	LOCATION	SEER/EER RATING	AFUE RATING	CFH INPUT	MAX OUTPUT	ENTERING AIR TEMP. (°F)	MAXIMUM LEAVING AIR TEMP. (°F)	NUMBER OF HEATING STAGES	E.S.P. (INCHES)	MOTOR H.P.	ELECTRICAL DATA					UNIT WEIGHT (LBS)	UNIT POSITION	MANUFACTURER & MODEL NUMBER	REMARKS
													VOLTS	ø	HZ	MCA	MOCP				
GF-1	720	SEE DWG.'S	SEE DRAWINGS	16.0/13.5	96	44	42	65	–	2	0.5	0.5	120	1	60	–	15	150	VERTICAL	LENNOX EL296UH045XV36B	①②③④⑤⑥⑦⑧⑨⑩⑪⑫
GF-2	815	SEE DWG.'S	SEE DRAWINGS	16.0/13.0	96	44	42	65	–	2	0.5	0.5	120	1	60	–	15	150	VERTICAL	LENNOX EL296UH045XV36B	①②③④⑤⑥⑦⑧⑨⑩⑪⑫
GF-3	1005	SEE DWG.'S	SEE DRAWINGS	16.0/13.0	96	66	62	65	–	3	0.5	0.5	120	1	60	–	15	150	VERTICAL	LENNOX SLP98UH070XV36B	①②③④⑤⑥⑦⑧⑨⑩⑪⑫
GF-4	1205	SEE DWG.'S	SEE DRAWINGS	15.0/12.5	96	66	62	65	–	3	0.5	0.5	120	1	60	–	15	150	VERTICAL	LENNOX SLP98UH070XV36B	①②③④⑤⑥⑦⑧⑨⑩⑪⑫
GF-5	1460	SEE DWG.'S	SEE DRAWINGS	16.0/13.0	96	88	85	65	–	3	0.5	1.00	120	1	60	–	20	200	VERTICAL	LENNOX SLP98UH090XV60C	①②③④⑤⑥⑦⑧⑨⑩⑪⑫
GF-6	1645	SEE DWG.'S	SEE DRAWINGS	15.2/12.7	96	88	85	65	–	3	0.5	0.75	120	1	60	–	15	200	VERTICAL	LENNOX SLP98UH090XV48C	①②③④⑤⑥⑦⑧⑨⑩⑪⑫
GF-7	1,890	SEE DWG.'S	SEE DRAWINGS	15.2/12.7	96	110	106	65	–	3	0.5	0.75	120	1	60	–	15	200	VERTICAL	LENNOX SLP98UH110XV60C	①②③④⑤⑥⑦⑧⑨⑩⑪⑫

① ALL UNITS SHALL BE SUPPLIED WITH AN ELECTRICAL DISCONNECT.
③ UNIT SHALL BE SUPPLIED WITH INTERMITTENT SPARK SAFETY PILOT WITH TIMED LOCKOUT, ELECTRONIC IGNITION, AND MULTI-STAGE FIRING.
④ UNIT SHALL BE SUPPLIED WITH A MANUFACTURER SUPPLIED VERTICAL VENT / COMBUSTION AIR CONCENTRIC TERMINAL KIT.
⑤ UNIT SHALL BE SUPPLIED WITH A 7-DAY PROGRAMMABLE HEAT/COOL/ON/OFF THERMOSTAT.
⑥ SEE DWGS FOR EXACT NUMBER OF UNITS.
⑦ ALL INDIRECT GAS FIRED FURNACES SHALL BE INSTALLED IN ACCORDANCE WITH THE UNIT MANUFACTURERS RECOMENDATIONS.
⑧ ALL UNITS SHALL BE PROVIDED WITH A PH NEUTRALIZING KIT FOR THE GAS FURNACE CONDENSATE.
⑨ ALL UNITS SHALL HAVE THEIR COMBUSTION AIR INTAKE AND VENT SIZED IN ACCORDANCE WITH THE UNIT MANUFACTURERS RECOMMENDATIONS. THE INTAKE PIPE AND FLUE PIPE SHALL BE EXTENDED TO ROOF AND TERMINATED WITH GOOSENECKS.
⑩ ALL UNITS SHALL BE PROVIDED WITH A SUITABLE CONDENSATE PUMP IF REMOVAL OF CONDENSATE CANNOT BE ACHIEVED BY GRAVITY ALONE.
⑪ ALL UNITS MOUNRTED ABOVE GYPSUM CEILINGS SHALL BE PROVIDED WITH A SECONDARY DRAIN PAN (ENTIRE FOOT PRINT OF UNIT) COMPLETE WITH SUITABLE FLOAT SWITCH THAT WILL DE-ENERGIZE THE UNIT UPON DETECTION OF WATER.
⑫ ALL INDIRECT GAS FIRED FURNACES SHALL BE PROVIDED WITH RETURN AIR FILTER BOX (MANUFACTURER SUPPLIED) C/W MERV 11 FILTER.

DX COOLING COIL

UNIT NO.	CFM	E.D.B. °F	E.W.B. °F	L.D.B. °F	L.W.B. °F	COOLING CAP. TOTAL/ SEN (MBH)	UNIT WEIGHT (LBS)	MANUFACTURER & MODEL NO.	REMARKS
CC-1	720	78.1	65.1	55.3	54.4	18.7/14.5	50	LENNOX CX34-31B-F	①②③
CC-2	815	78.9	65.6	56.6	55.5	24.0/18.8	50	LENNOX CX34-31B-F	①②③
CC-3	1,005	78.1	65.1	56.9	55.7	27.9/22.4	50	LENNOX CX34-31B-F	①②③
CC-4	1,205	78.9	65.6	55.2	54.6	32.5/25.0	50	LENNOX CX34-42B-F	①②③
CC-5	1,460	78.1	65.1	56.4	55.9	37.9/31.9	80	LENNOX CX34-62C-F	①②③
CC-6	1,645	78.4	65.3	56.5	55.4	46.7/37.1	80	LENNOX CX34-49C-F	①②③
CC-7	1,800	78.4	65.3	56.5	55.4	46.7/37.1	80	LENNOX CX34-49C-F	①②③

① ALL COOLING COILS SHALL BE INSTALLED IN ACCORDANCE WITH THE UNIT MANUFACTURERS RECOMENDATIONS.
② SEE DWGS FOR EXACT NUMBER OF UNITS.
③ OUTPUTS BASED ON SATURATED TEMPERATURE LEAVING THE EVAPORATOR AT 50°F.

AIR COOLED CONDENSING UNIT SCHEDULE

UNIT NO.	LOCATION	SERVES	SEER/EER RATING	NOMINAL OUTPUT TONS	REFRIG. SUCTION TEMP (°F)	OUTDOOR AIR TEMP (°F)	ELECTRICAL DATA					UNIT WEIGHT (LBS)	MANUFACTURER & MODEL NO.	REMARKS
							V	PH	HZ	MCA	MOCP			
ACCU-5	ROOF	CC-1	16.0/13.5	1.5	45	95	208	1	60	19.1	30	150	LENNOX XC20-024-230	①②③④⑤⑥⑦⑧⑨⑩⑪
ACCU-6	ROOF	CC-2	16.0/13.0	2.0	45	95	208	1	60	19.1	30	200	LENNOX XC20-024-230	①②③④⑤⑥⑦⑧⑨⑩⑪
ACCU-7	ROOF	CC-3	16.0/13.0	2.5	45	95	208	1	60	20.6	30	200	LENNOX XC20-036-230	①②③④⑤⑥⑦⑧⑨⑩⑪
ACCU-8	ROOF	CC-4	15.0/12.5	3.0	45	95	208	1	60	20.6	30	200	LENNOX XC20-036-230	①②③④⑤⑥⑦⑧⑨⑩⑪
ACCU-9	ROOF	CC-5	16.0/13.0	3.5	45	95	208	1	60	29.1	50	250	LENNOX XC20-048-230	①②③④⑤⑥⑦⑧⑨⑩⑪
ACCU-10	ROOF	CC-6	15.2/12.7	4.0	45	95	208	1	60	29.1	50	250	LENNOX XC20-048-230	①②③④⑤⑥⑦⑧⑨⑩⑪
ACCU-11	ROOF	CC-7	15.2/12.7	5.0	45	95	208	1	60	29.3	50	250	LENNOX XC20-060-230	①②③④⑤⑥⑦⑧⑨⑩⑪

① ALL UNITS SHALL BE SUPPLIED WITH AN ELECTRICAL DISCONNECT.
② UNIT SHALL BE INTERLOCKED WITH THEIR RESPECTIVE INDIRECT GAS FIRED UNITS.
③ ALL ACCU'S SHALL BE MOUNTED ON A SUITABLE PAD PROVIDED BY THE GC.
④ ALL ACCU'S SHALL BE INSTALLED IN ACCORDANCE WITH THE UNIT MANUFACTURERS RECOMENDATIONS.
⑤ SEE DWGS FOR EXACT NUMBER OF UNITS.
⑥ ALL REFRIGERANT PIPE SIZING SHALL BE CARRIED OUT IN ACCORDANCE WITH THE UNIT MANUFACTURERS RECOMENDATIONS TO SUIT THE ACTUAL LOCATION OF THE AIR COOLED CONDENSER UNIT AND THE ASSOCIATED COOLING COIL.
⑦ THE FINAL LOCATIONS OF ALL THE ACCU'S SHALL BE APPROVED BY THE BUILDING OWNER AND ARCHITECT.
⑧ ALL ACCU'S SHALL BE INSTALLED TO MAINTAIN THE SEER RATING OF THE COMBINATION UNIT: GAS FURNACE, COOLING COIL AND ACCU.
⑨ ALL ACCU'S SHALL BE PROVIDED WITH ANTI-VIBRATION MATS.
⑩ ALL ACCU'S SHALL BE PROVIDED WITH LOW AMBIENT KIT.
⑪ ALL ACCU'S SHALL BE PROVIDED WITH VARIABLE SPEED COMPRESSORS.

HEAT PUMP MINI-SPLIT SYSTEM SCHEDULE

INDOOR UNIT																AIR COOLED CONDENSING UNIT							SEER	COP @ 47 °F	OUTDOOR AIR TEMPERATURE (°F)	REMARKS
SYMBOL	SERVICE	SUPPLY FAN		INDOOR AIR RETURN TEMP (°F)		COOLING COIL (MBH)		HEATING @ 47 °F (MBH)	HEATING @ 17 °F (MBH)	HEATING @ -4 °F (MBH)	MANUFACTURER & MODEL NUMBER	V	PH	HZ	MCA	MOCP	MANUFACTURER & MODEL NUMBER	V	PH	HZ	MCA	MOCP	SYMBOL				
		CFM	TOTAL KW	D.B.	W.B.	MINIMUM	MAXIMUM																			
AC-1	SEE DRAWINGS	121-448	0.030	80	67	–	12.0	14.4	14.4	12.2	MITSUBISHI MSZ-EF12NAW	208	1	60	1	–	MITSUBISHI MXZ-3C24NAHZ2	208	1	60	30.5	40	ACCU-12	19.0	4.25	95	①②③④⑤⑥⑦⑧
AC-2	SEE DRAWINGS	121-448	0.030	80	67	–	12.0	14.4	14.4	12.2	MITSUBISHI MSZ-EF12NAW	208	1	60	1	–											①②③④⑤⑥⑦⑧
HP-1	TOP FLOOR BEDROOM	221-405	0.050	80	67	5.1	14.1	18.0	11.9	6.6	MITSUBISHI SLZ-KF15NA	208	1	60	0.4	–	MITSUBISHI SUZ-KA15NA2	208	1	60	10	15	ACCU-13	19.8	3.05	95	①②③④⑤⑥⑦⑧⑨

① PROVIDE TWO SETS OF FILTERS.
② THE UNIT SHALL BE PROVIDED WITH A DISCONNECT SUITABLE FOR OUTDOOR USE. THE DISCONNECT SHALL BE PROVIDED BY THE ELECTRICAL CONTRACTOR.
③ THE INDOOR UNIT SHALL BE POWERED FROM THE OUTDOOR UNIT AS SHOWN IN THE MANUFACTURER'S INSTALLATION MANUAL.
④ PROVIDE A COMPLETE CONTROL PACKAGE.
⑤ PROVIDE UNIT WITH WIND BAFFLE FOR LOW AMBIENT OPERATION.
⑥ PROVIDE A CONDENSATE PUMP
⑦ PROVIDE A 5-YEAR EXTENDED WARRANTY ON THE COMPRESSORS.
⑧ THE UNIT SHALL BE PROVIDED WITH A REMOTE WALL-MOUNTED THERMOSTAT.
⑨ UNIT SHALL BE PROVIDED WITH A FRESH AIR INTAKE KIT.

WB&A
Wozny/Barber & Associates, Inc.
CONSULTING ENGINEERS
1076 Washington Street, Hanover, MA 02339, Tel: (781) 826-4144, Fax: (781) 924-5792, www.wbassgineers.com
161 Exchange Street, 3rd Floor, Pawtucket, RI 02860

Date issued:

07.15.19

WINSLOW ARCHITECTS INC

89 MASSACHUSETTS AVE.
ARLINGTON, MA 02474

P: 781 648.6600
F: 781 648.6601

www.winslowarchitects.com

Owner/Developer:

MEDFIELD GREEN LLC.

Project:

MEDFIELD GREEN

Drawing:

Mechanical Schedules

Revisions:

No.	Description	Date

Stamp:

ANY REPRODUCTION, POSSESSION OR USE OF THIS DRAWING WITHOUT THE WRITTEN PERMISSION OF WINSLOW ARCHITECTS INC. IS PROHIBITED. VIOLATORS WILL BE PROSECUTED TO THE FULL EXTENT OF THE LAW.

© 2019 WINSLOW ARCHITECTS, INC.

Project number:

16-515

Sheet:

M-003

7/17/2019 10:30 AM

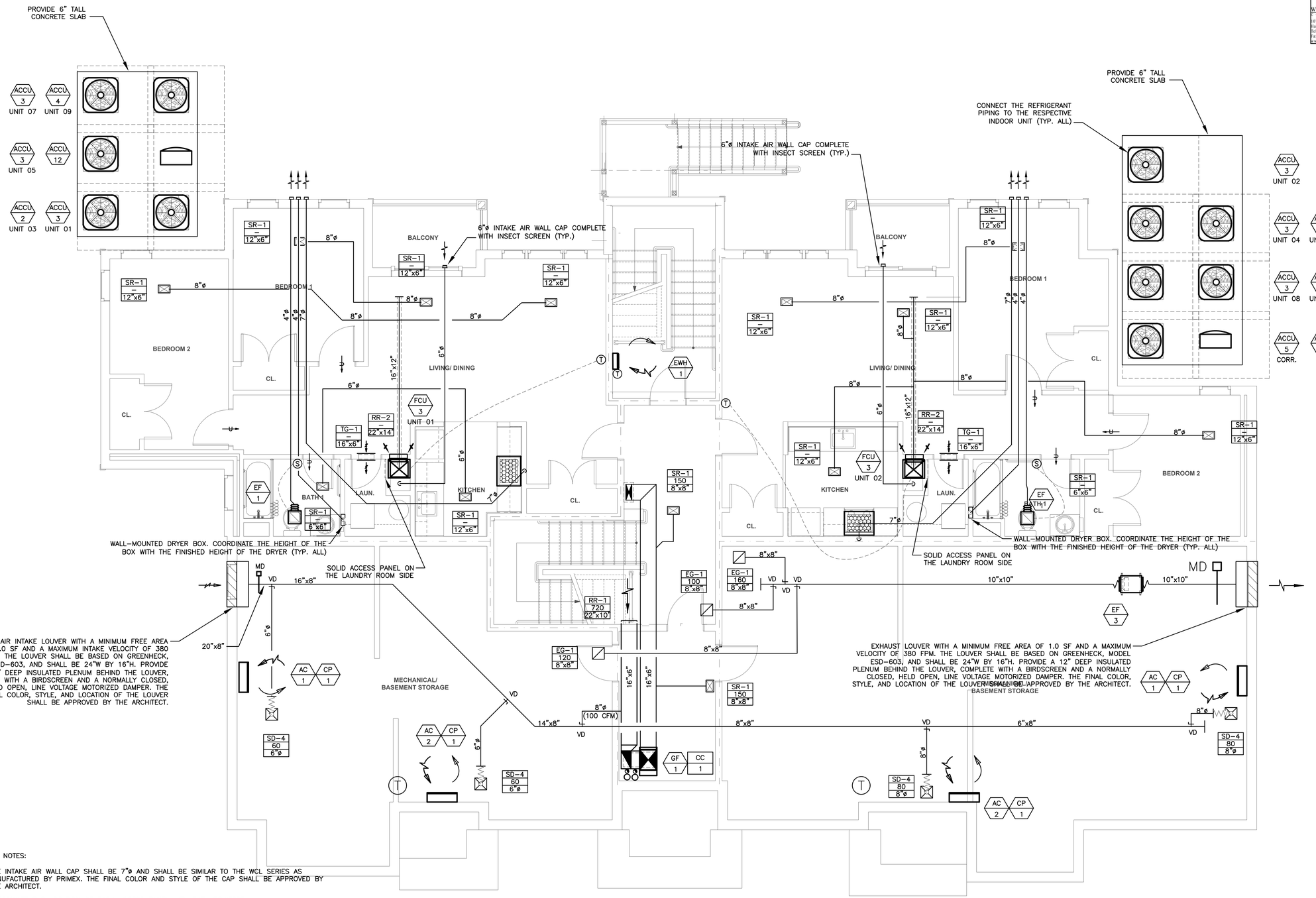

DRAWING NOTES:

1. THE INTAKE AIR WALL CAP SHALL BE 7"ø AND SHALL BE SIMILAR TO THE WCL SERIES AS MANUFACTURED BY PRIMEX. THE FINAL COLOR AND STYLE OF THE CAP SHALL BE APPROVED BY THE ARCHITECT.
2. COORDINATE THE LOCATION OF EACH ACCESS PANEL WITH THE ARCHITECT.
3. THE BATHROOM EXHAUST WALL CAP SHALL BE 4"ø AND SHALL BE SIMILAR TO THE FAMCO LH PLASTIC WALL VENT. PROVIDE AN INSECT SCREEN AND BACKDRAFT DAMPER WITH THE WALL VENT. THE FINAL COLOR AND STYLE OF THE WALL VENT SHALL BE APPROVED BY THE ARCHITECT.
3. THE DRYER EXHAUST WALL CAP SHALL BE 4"ø AND SHALL BE SIMILAR TO THE FAMCO LH PLASTIC WALL VENT. PROVIDE ONLY A BACKDRAFT DAMPER WITH THE WALL VENT. THE FINAL COLOR AND STYLE OF THE WALL VENT SHALL BE APPROVED BY THE ARCHITECT.
4. THE KITCHEN EXHAUST WALL CAP SHALL BE 7"ø AND SHALL BE SIMILAR TO THE FAMCO LH PLASTIC WALL VENT. PROVIDE A BACKDRAFT DAMPER AND INSECT SCREEN WITH THE WALL VENT. THE FINAL COLOR AND STYLE OF THE WALL VENT SHALL BE APPROVED BY THE ARCHITECT.
5. THE RESIDENTIAL STYLE KITCHEN HOOD SHALL BE PROVIDED BY THE G.C. THE KITCHEN EXHAUST DUCT SHALL EXIT THROUGH THE BACK OF THE HOOD AND UP THROUGH THE WALL AND INTO THE CEILING TO ELIMINATE THE REQUIREMENT FOR A CEILING RADIATION DAMPER.

WB&A
Wozny/Barbar & Associates, Inc.
CONSULTING ENGINEERS
1076 Washington Street
Hanover, MA 02339
Tel: (781) 826-4144
Fax: (781) 924-5792
www.wbaengineers.com
161 Exchange Street
3rd Floor
Pawtucket, RI 02860

Date issued:

07.15.19

WINSLOW ARCHITECTS INC
89 MASSACHUSETTS AVE.
ARLINGTON, MA 02474
P: 781 648.6600
F: 781 648.6601
www.winslowarchitects.com

Owner/Developer:

MEDFIELD GREEN LLC.

Project:

MEDFIELD GREEN

Drawing:

Mechanical Building A&B Basement Floor Plan

Revisions:

No.	Description	Date

Stamp:

ANY REPRODUCTION, POSSESSION OR USE OF THIS DRAWING WITHOUT THE WRITTEN PERMISSION OF WINSLOW ARCHITECTS INC. IS PROHIBITED. VIOLATORS WILL BE PROSECUTED TO THE FULL EXTENT OF THE LAW.
© 2019 WINSLOW ARCHITECTS, INC.

Project number:

16-515

Sheet:

M-AB-100

7/17/2019 10:30 AM

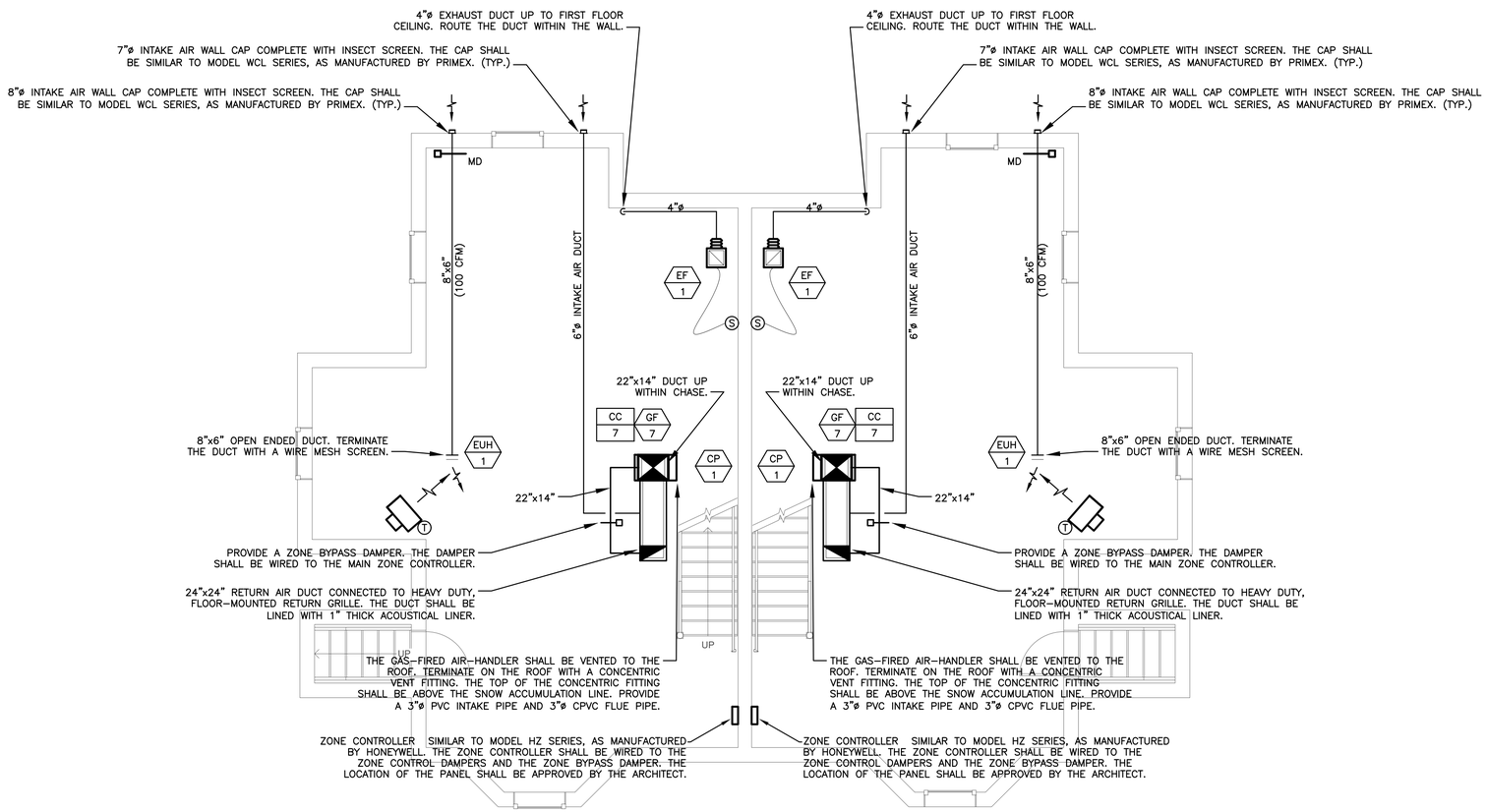

WB&A
Wozny/Barbar & Associates, Inc.
CONSULTING ENGINEERS
1076 Washington Street
Hanover, MA 02339
Tel: (781) 826-4144
Fax: (781) 924-5792
www.wbassociates.com
161 Exchange Street
3rd Floor
Pawtucket, RI 02860

Date issued:

07.15.19

WINSLOW ARCHITECTS INC

89 MASSACHUSETTS AVE.
ARLINGTON, MA 02474

P: 781 648.6600
F: 781 648.6601

www.winslowarchitects.com

Owner/Developer:

MEDFIELD GREEN LLC.

Project:

MEDFIELD GREEN

Drawing:

Mechanical Building C Basement Floor Plan

Revisions:

No.	Description	Date

Stamp:

ANY REPRODUCTION, POSSESSION OR USE OF THIS DRAWING WITHOUT THE WRITTEN PERMISSION OF WINSLOW ARCHITECTS INC. IS PROHIBITED. VIOLATORS WILL BE PROSECUTED TO THE FULL EXTENT OF THE LAW.

© 2019 WINSLOW ARCHITECTS, INC.

Project number:

16-515

Sheet:

M-C-100

7/17/2019 10:30 AM

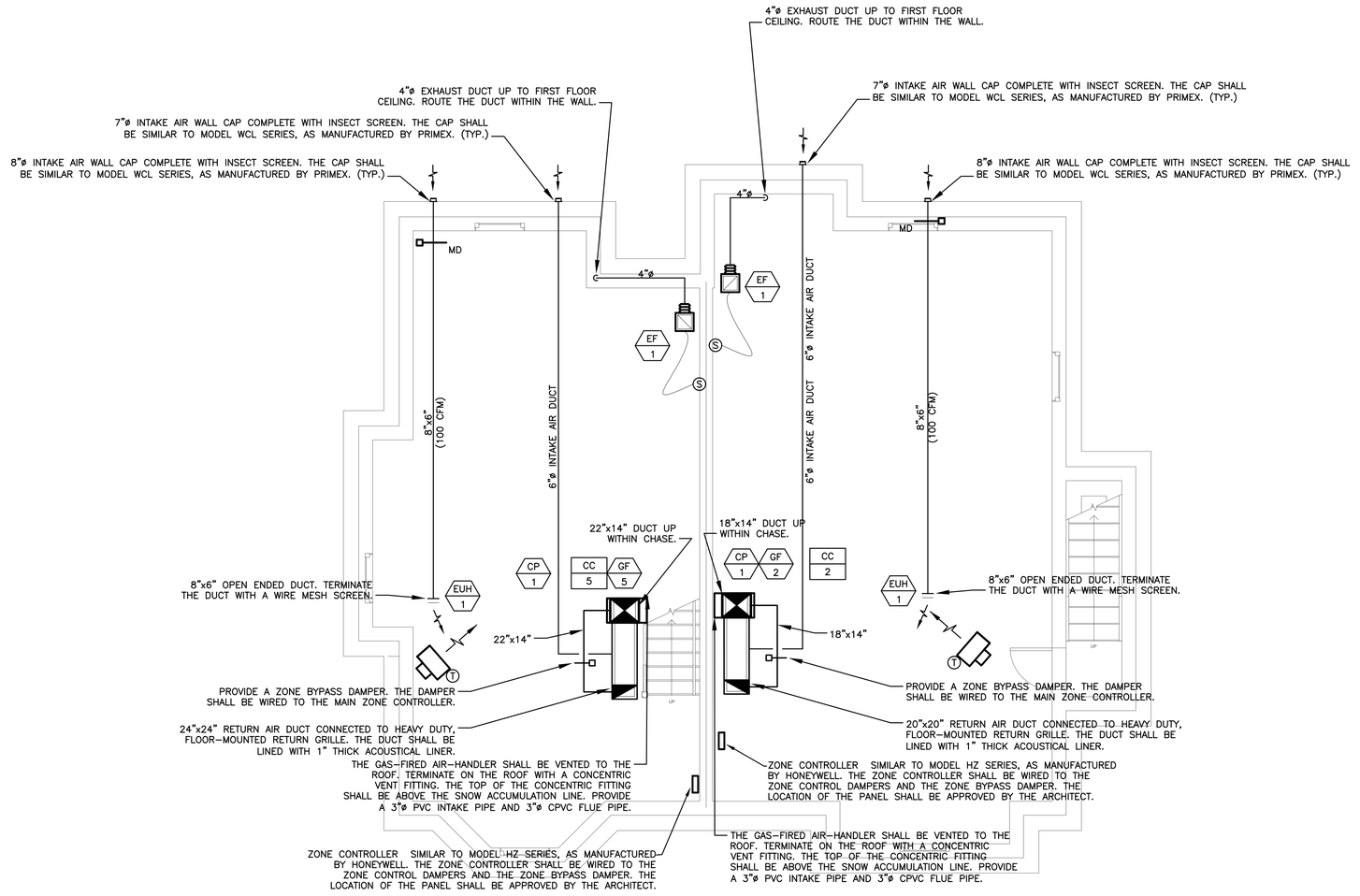

WB&A
Wozny/Barbar & Associates, Inc.
CONSULTING ENGINEERS
1076 Washington Street
Hanover, MA 02339
Tel: (781) 826-4144
Fax: (781) 924-5792
www.wbassociates.com

161 Exchange Street
3rd Floor
Pawtucket, RI 02860

Date issued:

07.15.19

WINSLOW ARCHITECTS INC

89 MASSACHUSETTS AVE.
ARLINGTON, MA 02474

P: 781 648.6600
F: 781 648.6601

www.winslowarchitects.com

Owner/Developer:

MEDFIELD GREEN LLC.

Project:

MEDFIELD GREEN

Drawing:

Mechanical Building D Basement Floor Plan

Revisions:

No.	Description	Date

Stamp:

ANY REPRODUCTION, POSSESSION OR USE OF THIS DRAWING WITHOUT THE WRITTEN PERMISSION OF WINSLOW ARCHITECTS INC. IS PROHIBITED. VIOLATORS WILL BE PROSECUTED TO THE FULL EXTENT OF THE LAW.

© 2019 WINSLOW ARCHITECTS, INC.

Project number:

16-515

Sheet:

M-D-100

7/17/2019 10:30 AM

WB&A
Wozny/Barbar & Associates, Inc.
CONSULTING ENGINEERS
1076 Washington Street
Hanover, MA 02339
Tel: (781) 826-4144
Fax: (781) 924-5792
www.wbassociates.com
161 Exchange Street
3rd Floor
Pawtucket, RI 02860

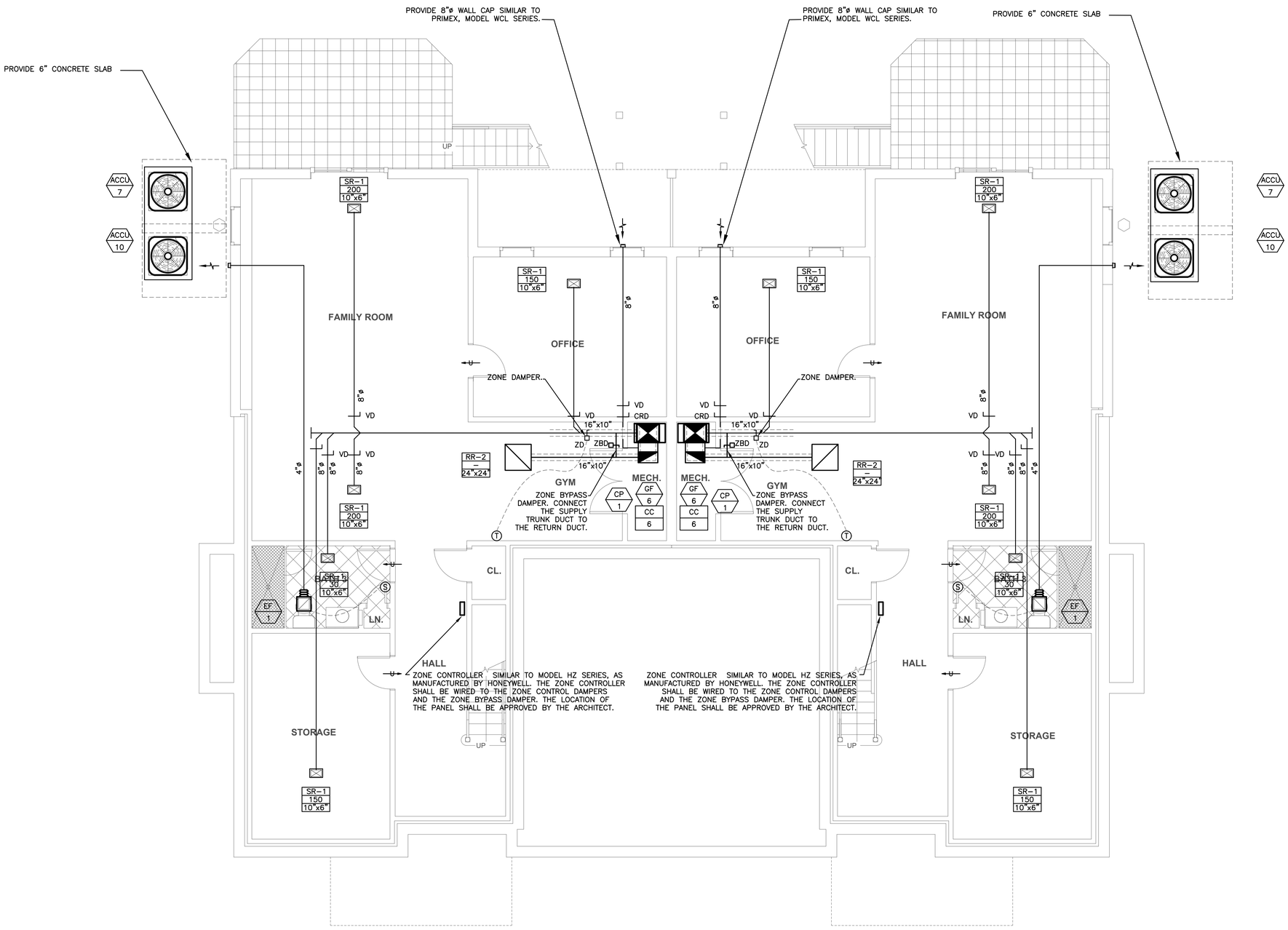

Date issued:

07.15.19

WINSLOW ARCHITECTS INC

89 MASSACHUSETTS AVE.
ARLINGTON, MA 02474

P: 781 648.6600
F: 781 648.6601

www.winslowarchitects.com

Owner/Developer:

MEDFIELD GREEN LLC.

Project:

MEDFIELD GREEN

Drawing:

Mechanical Building E Basement Floor Plan

Revisions:

No.	Description	Date

Stamp:

ANY REPRODUCTION, POSSESSION OR USE OF THIS DRAWING WITHOUT THE WRITTEN PERMISSION OF WINSLOW ARCHITECTS INC. IS PROHIBITED. VIOLATORS WILL BE PROSECUTED TO THE FULL EXTENT OF THE LAW.

© 2019 WINSLOW ARCHITECTS, INC.

Project number:

16-515

Sheet:

M-E-100

7/17/2019 10:31 AM

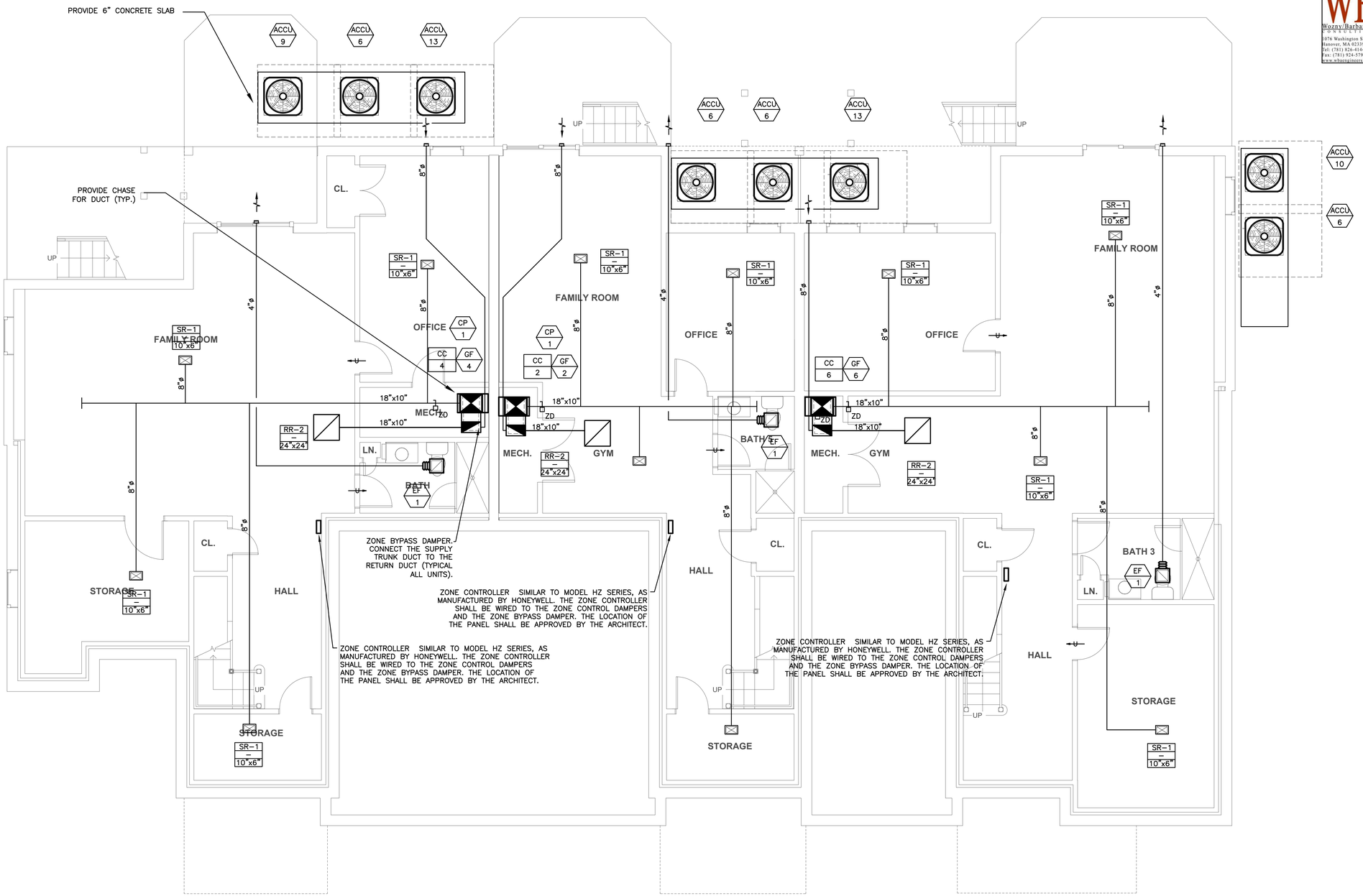

WB&A
Wozny/Barbar & Associates, Inc.
CONSULTING ENGINEERS
1076 Washington Street
Hanover, MA 02339
Tel: (781) 826-4144
Fax: (781) 924-5792
www.wbassociates.com
161 Exchange Street
3rd Floor
Pawtucket, RI 02860

Date issued:

07.15.19

WINSLOW ARCHITECTS INC
89 MASSACHUSETTS AVE.
ARLINGTON, MA 02474
P: 781 648.6600
F: 781 648.6601
www.winslowarchitects.com

Owner/Developer:

MEDFIELD GREEN LLC.

Project:

MEDFIELD GREEN

Drawing:

Mechanical Building F Basement Floor Plan

Revisions:

No.	Description	Date

Stamp:

ANY REPRODUCTION, POSSESSION OR USE OF THIS DRAWING WITHOUT THE WRITTEN PERMISSION OF WINSLOW ARCHITECTS INC. IS PROHIBITED. VIOLATORS WILL BE PROSECUTED TO THE FULL EXTENT OF THE LAW.

© 2019 WINSLOW ARCHITECTS, INC.

Project number:

16-515

Sheet:

M-F-100

7/17/2019 10:31 AM

WB&A
Wozny/Barbar & Associates, Inc.
CONSULTING ENGINEERS
1076 Washington Street
Hanover, MA 02339
Tel: (781) 826-4144
Fax: (781) 924-5792
www.wbassalmers.com
161 Exchange Street
3rd Floor
Pawtucket, RI 02860

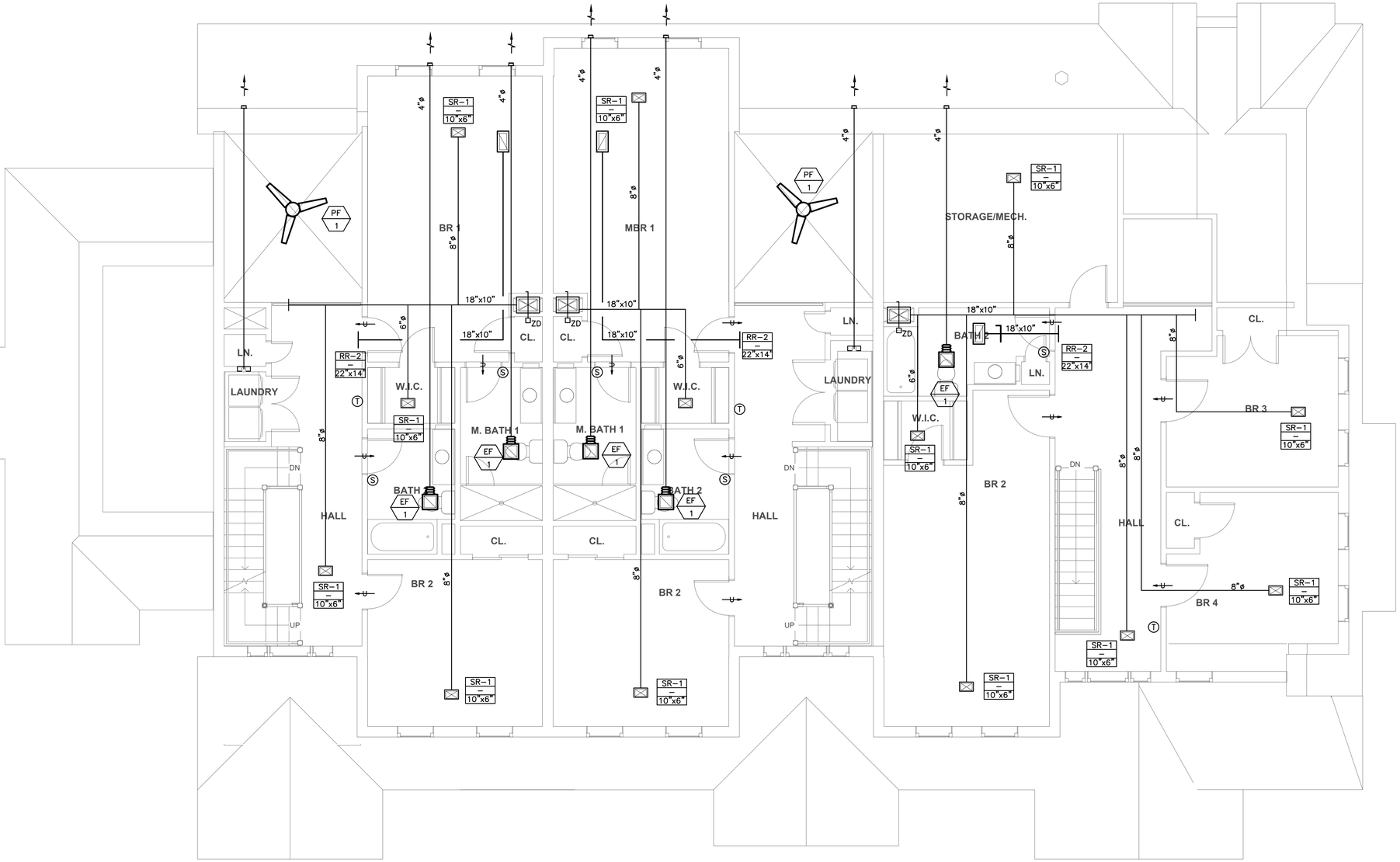

Date issued:

07.15.19

WINSLOW ARCHITECTS INC

89 MASSACHUSETTS AVE.
ARLINGTON, MA 02474

P: 781 648.6600
F: 781 648.6601

www.winslowarchitects.com

Owner/Developer:

MEDFIELD GREEN LLC.

Project:

MEDFIELD GREEN

Drawing:

Mechanical Building F Second Floor Plan

Revisions:

No.	Description	Date

Stamp:

ANY REPRODUCTION, POSSESSION OR USE OF THIS DRAWING WITHOUT THE WRITTEN PERMISSION OF WINSLOW ARCHITECTS INC. IS PROHIBITED. VIOLATORS WILL BE PROSECUTED TO THE FULL EXTENT OF THE LAW.

© 2019 WINSLOW ARCHITECTS, INC.

Project number:

16-515

Sheet:

M-F-102

7/17/2019 10:31 AM

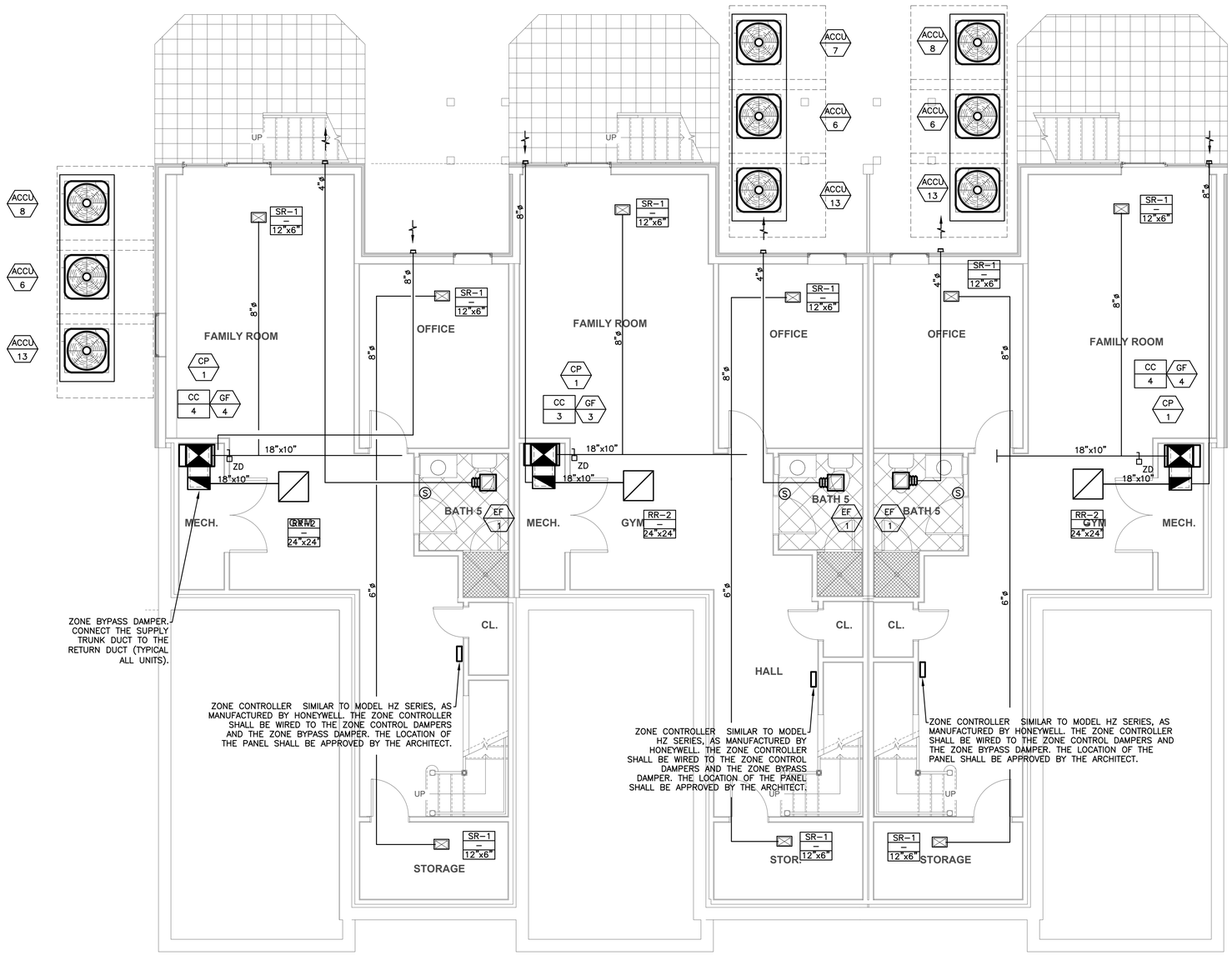

WB&A
Wozny/Barbar & Associates, Inc.
CONSULTING ENGINEERS
1076 Washington Street
Hanover, MA 02339
Tel: (781) 826-4144
Fax: (781) 924-5792
www.wbassociates.com
161 Exchange Street
3rd Floor
Pawtucket, RI 02860

Date issued:

07.15.19

WINSLOW ARCHITECTS INC
89 MASSACHUSETTS AVE.
ARLINGTON, MA 02474
P: 781 648.6600
F: 781 648.6601
www.winslowarchitects.com

Owner/Developer:

MEDFIELD GREEN LLC.

Project:

MEDFIELD GREEN

Drawing:

Mechanical Building G Basement Floor Plan

Revisions:

No.	Description	Date

Stamp:

ANY REPRODUCTION, POSSESSION OR USE OF THIS DRAWING WITHOUT THE WRITTEN PERMISSION OF WINSLOW ARCHITECTS INC. IS PROHIBITED. VIOLATORS WILL BE PROSECUTED TO THE FULL EXTENT OF THE LAW.
© 2019 WINSLOW ARCHITECTS, INC.

Project number:

16-515

Sheet:

M-G-100

7/17/2019 10:31 AM

DRAWING NOTES:

1. THE INTAKE AIR WALL CAP SHALL BE 7"ø AND SHALL BE SIMILAR TO THE WCL SERIES AS MANUFACTURED BY PRIMEX. THE FINAL COLOR AND STYLE OF THE CAP SHALL BE APPROVED BY THE ARCHITECT.
2. COORDINATE THE LOCATION OF EACH ACCESS PANEL WITH THE ARCHITECT.
3. THE BATHROOM EXHAUST WALL CAP SHALL BE 4"ø AND SHALL BE SIMILAR TO THE FAMCO LH PLASTIC WALL VENT. PROVIDE AN INSECT SCREEN AND BACKDRAFT DAMPER WITH THE WALL VENT. THE FINAL COLOR AND STYLE OF THE WALL VENT SHALL BE APPROVED BY THE ARCHITECT.
3. THE DRYER EXHAUST WALL CAP SHALL BE 4"ø AND SHALL BE SIMILAR TO THE FAMCO LH PLASTIC WALL VENT. PROVIDE ONLY A BACKDRAFT DAMPER WITH THE WALL VENT. THE FINAL COLOR AND STYLE OF THE WALL VENT SHALL BE APPROVED BY THE ARCHITECT.
4. THE KITCHEN EXHAUST WALL CAP SHALL BE 7"ø AND SHALL BE SIMILAR TO THE FAMCO LH PLASTIC WALL VENT. PROVIDE A BACKDRAFT DAMPER AND INSECT SCREEN WITH THE WALL VENT. THE FINAL COLOR AND STYLE OF THE WALL VENT SHALL BE APPROVED BY THE ARCHITECT.
5. THE RESIDENTIAL STYLE KITCHEN HOOD SHALL BE PROVIDED BY THE G.C. THE KITCHEN EXHAUST DUCT SHALL EXIT THROUGH THE BACK OF THE HOOD AND UP THROUGH THE WALL AND INTO THE CEILING TO ELIMINATE THE REQUIREMENT FOR A CEILING RADIATION DAMPER.

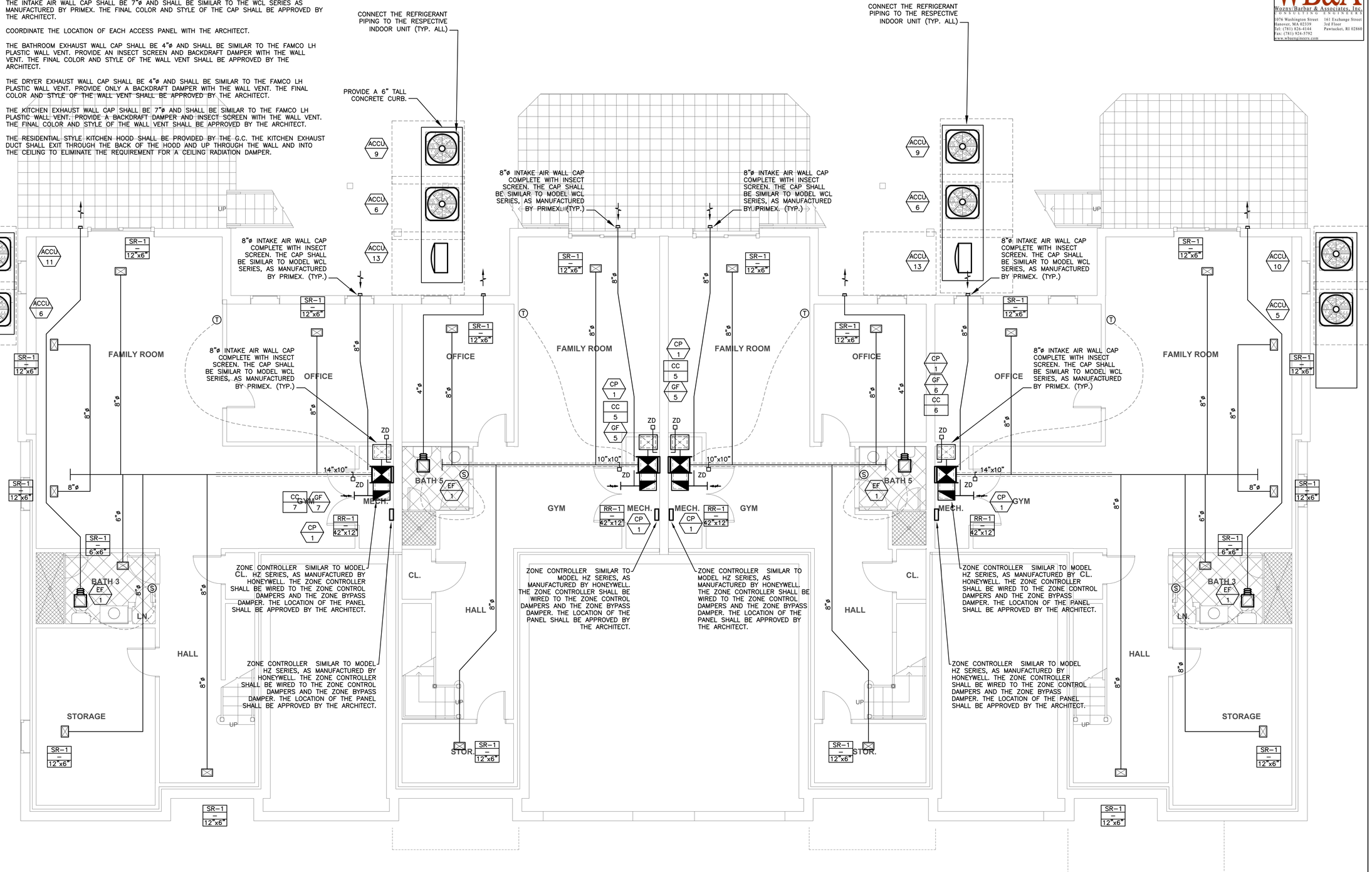

WB&A
Wozny/Barber & Associates, Inc.
CONSULTING ENGINEERS
1076 Washington Street
Hanover, MA 02339
Tel: (781) 826-4144
Fax: (781) 924-5792
www.wbassociates.com
161 Exchange Street
3rd Floor
Pawtucket, RI 02860

Date issued:

07.15.19

WINSLOW ARCHITECTS INC

89 MASSACHUSETTS AVE.
ARLINGTON, MA 02474

P: 781 648.6600
F: 781 648.6601

www.winslowarchitects.com

Owner/Developer:

MEDFIELD GREEN LLC.

Project:

MEDFIELD GREEN

Drawing:

Mechanical Building H Basement Floor Plan

Revisions:

No.	Description	Date

Stamp:

ANY REPRODUCTION, POSSESSION OR USE OF THIS DRAWING WITHOUT THE WRITTEN PERMISSION OF WINSLOW ARCHITECTS INC. IS PROHIBITED. VIOLATORS WILL BE PROSECUTED TO THE FULL EXTENT OF THE LAW.

© 2019 WINSLOW ARCHITECTS, INC.

Project number:

16-515

Sheet:

M-H-100

7/17/2019 10:32 AM

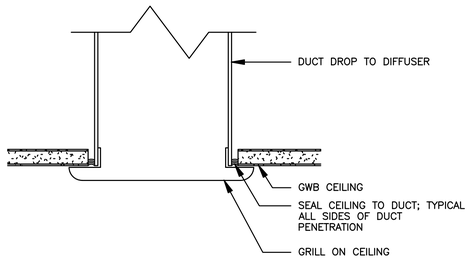

DUCT SEALANT DETAIL

Scale: None

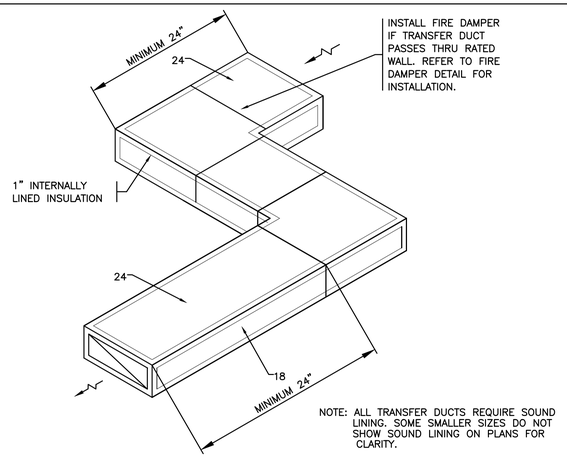

TRANSFER DUCT DETAIL

Scale: None

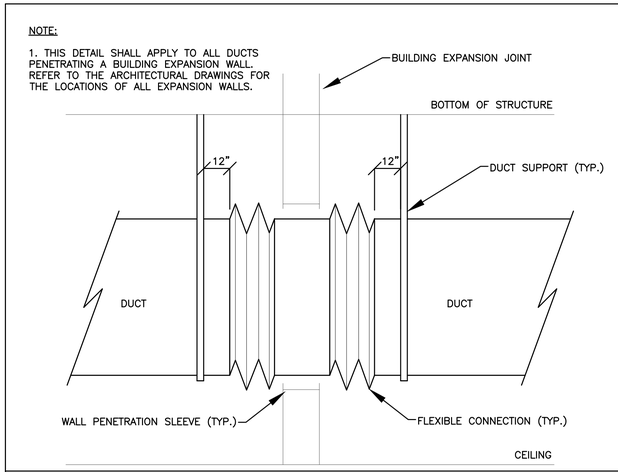

DETAIL AT BUILDING EXPANSION JOINTS

Scale: None

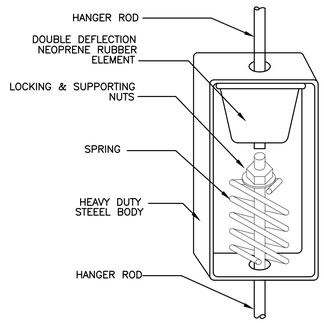

NOTE:
HANGER SIZE SHALL BE AS PER MFG'S RECOMMENDATION & ACCORDING TO THE LOAD.

PIPING AND EQUIPMENT ISOLATION HANGER DETAIL

Scale: None

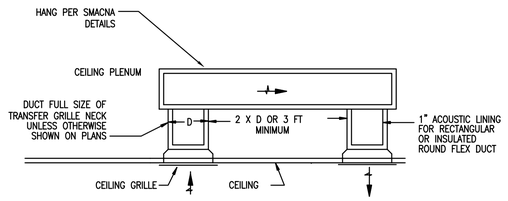

TRANSFER BOOT WITH GRILLES DETAIL

Scale: None

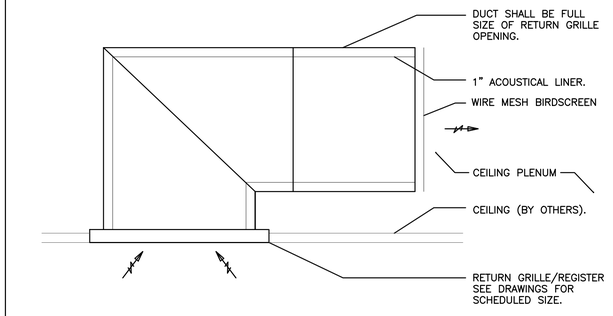

RETURN GRILLE ACOUSTICAL BOOT DETAIL

Scale: None

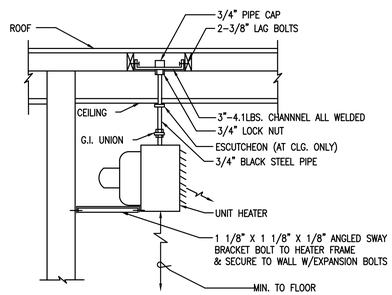

UNIT HEATER MOUNTING DETAIL

Scale: None

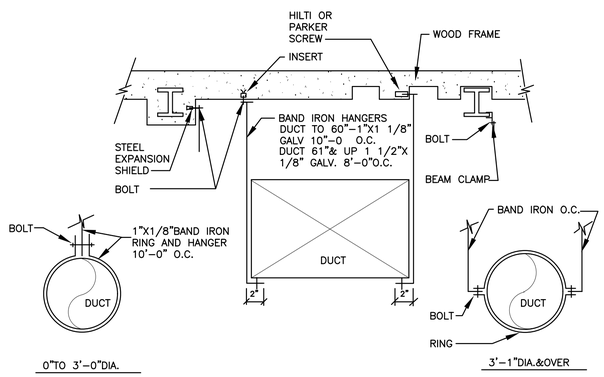

STANDARD HANGING DETAIL

Scale: None

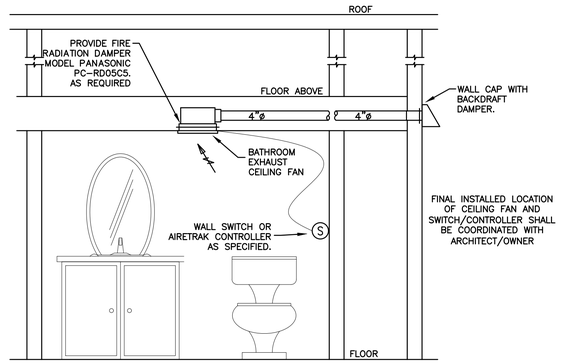

BATHROOM EXHAUST FAN DETAIL

Scale: None

WB&A
Wozny/Barbar & Associates, Inc.
CONSULTING ENGINEERS
1076 Washington Street
Hanover, MA 02339
Tel: (781) 826-4144
Fax: (781) 924-5792
www.wbassociates.com
161 Exchange Street
3rd Floor
Pawtucket, RI 02860

Date issued:

07.15.19

WINSLOW ARCHITECTS INC

89 MASSACHUSETTS AVE.
ARLINGTON, MA 02474

P: 781 648.6600
F: 781 648.6601

www.winslowarchitects.com

Owner/Developer:

MEDFIELD GREEN LLC.

Project:

MEDFIELD GREEN

Drawing:

Mechanical Details

Revisions:

No.	Description	Date

Stamp:

ANY REPRODUCTION, POSSESSION OR USE OF THIS DRAWING WITHOUT THE WRITTEN PERMISSION OF WINSLOW ARCHITECTS INC. IS PROHIBITED. VIOLATORS WILL BE PROSECUTED TO THE FULL EXTENT OF THE LAW.

© 2019 WINSLOW ARCHITECTS, INC.

Project number:

16-515

Sheet:

M-201

7/17/2019 10:32 AM

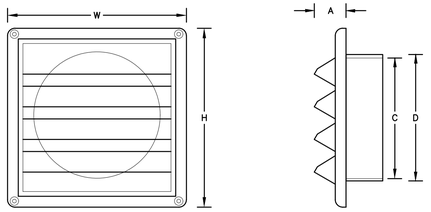

FAMCO PLASTIC WALL VENT W/ FIXED LOUVERS							
ITEM #	SIZE (IN)	A	C	D	W/H	LOUVERS	FREE AREA IN²
AI4	4"	1 1/16"	4 1/8"	4 1/4"	6"	4	10.90 IN²
AI6	6"	1 1/16"	6 1/8"	6 1/4"	8 1/8"	5	19.30 IN²

FIXED LOUVER WALL VENT DETAIL

Scale: None

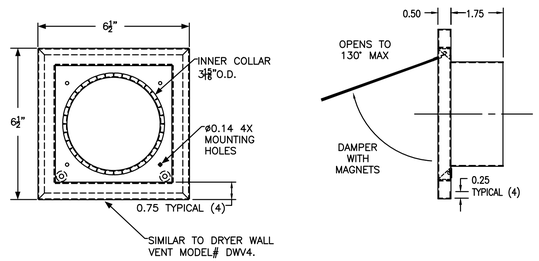

DRYER WALL VENT DETAIL

Scale: None

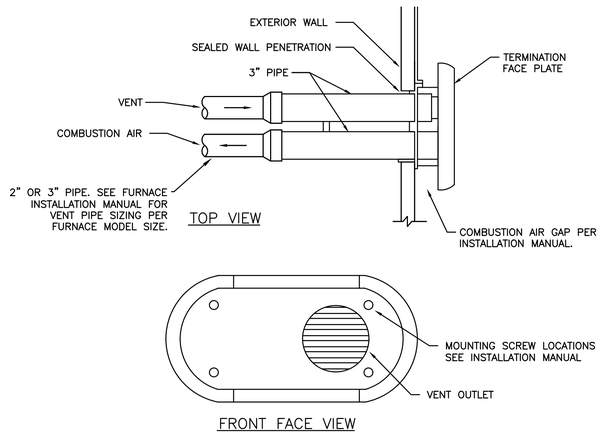

SIDEWALL VENT KIT DETAIL

Scale: None

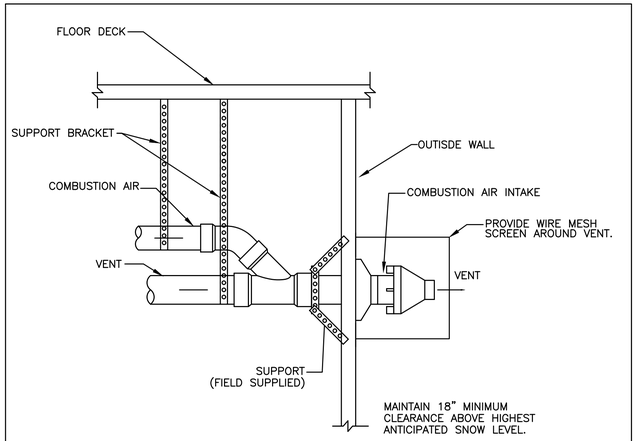

COMBUSTION AIR INTAKE & VENT TERMINATION DETAIL

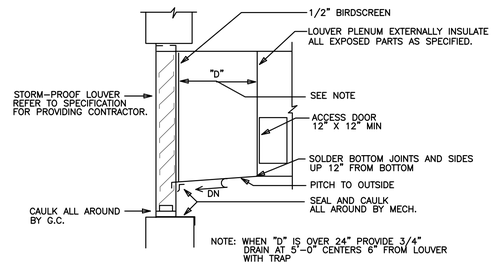

TYPICAL LOUVER CONNECTION DETAIL

Scale: None

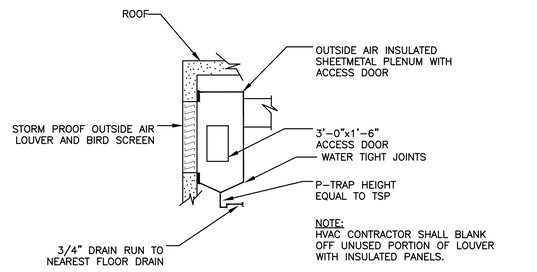

TYPICAL PLENUM AND DRAIN DETAIL

Scale: None

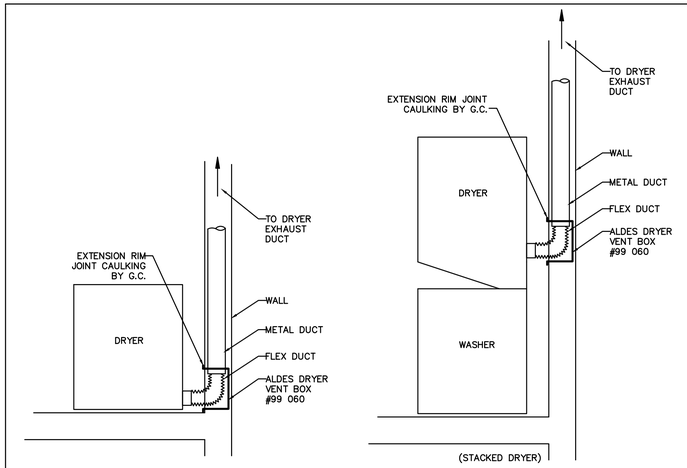

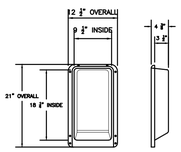

NOTES:

1. DRYER EXHAUST DUCT MATERIAL, INSTALLATION, TRANSITIONS, MAXIMUM LENGTH, IDENTIFICATION, AND PROTECTIVE SHIELD PLATES SHALL BE FURNISHED AND INSTALLED IN ACCORDANCE WITH THE LATEST IMC RELATED SECTIONS.
2. MAXIMUM LENGTH OF EXHAUST DUCT SHALL BE DETERMINED BY THE DRYER MANUFACTURER'S INSTALLATION INSTRUCTIONS. ONCE THE DRYER EXHAUST DUCT HAS BEEN INSTALLED, THE CONTRACTOR SHALL PROVIDE A PERMANENT LABEL INDICATING THE TOTAL DEVELOPED LENGTH OF THE DRYER EXHAUST DUCT. THE LABEL SHALL BE INSTALLED ON THE DRYER WALL BOX.
3. PROVIDE THE CODE OFFICIAL WITH A COPY OF THE INSTALLATION INSTRUCTIONS FOR THE MAKE AND MODEL OF THE INSTALLED DRYER.
4. COORDINATE THE LOCATION OF THE DRYER VENT BOX WITH THE FINISHED HEIGHT OF THE DRYER OUTLET. THE DRYER BOX IS REQUIRED TO BE EASILY ACCESSIBLE. REFER TO THE ARCHITECTURAL DRAWINGS AND SPECIFICATIONS FOR THE HEIGHT OF THE DRYER OUTLET.

DRYER BOX DETAIL

Scale: None

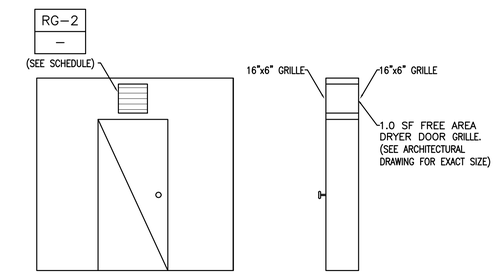

TYPICAL APARTMENT DRYER DOOR GRILLE DETAIL

Scale: None

WB&A
Wozny/Barbar & Associates, Inc.
CONSULTING ENGINEERS
1076 Washington Street
Hanover, MA 02339
Tel: (781) 826-4144
Fax: (781) 924-5792
www.wbassociates.com
161 Exchange Street
3rd Floor
Pawtucket, RI 02860

Date issued:

07.15.19

WINSLOW ARCHITECTS INC

89 MASSACHUSETTS AVE.
ARLINGTON, MA 02474

P: 781 648.6600
F: 781 648.6601

www.winslowarchitects.com

Owner/Developer:

MEDFIELD GREEN LLC.

Project:

MEDFIELD GREEN

Drawing:

Mechanical Details

Revisions:

No.	Description	Date

Stamp:

ANY REPRODUCTION, POSSESSION OR USE OF THIS DRAWING WITHOUT THE WRITTEN PERMISSION OF WINSLOW ARCHITECTS INC. IS PROHIBITED. VIOLATORS WILL BE PROSECUTED TO THE FULL EXTENT OF THE LAW.

© 2019 WINSLOW ARCHITECTS, INC.

Project number:

16-515

Sheet:

M-202

7/17/2019 10:32 AM

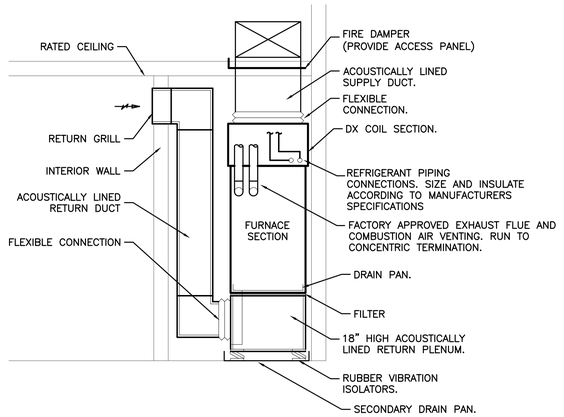

NOTE: CONTRACTOR TO PROVIDE TWO CONDENSATE LINES. THE COOLING CONDENSATE SHALL BE CONNECTED TO THE STORM SYSTEM. THE THE HEATING SYSTEM MUST BE DRAINED TO THE SANITARY SYSTEM.

CLOSET MOUNTED AIR HANDLING UNIT DETAIL

Scale: None

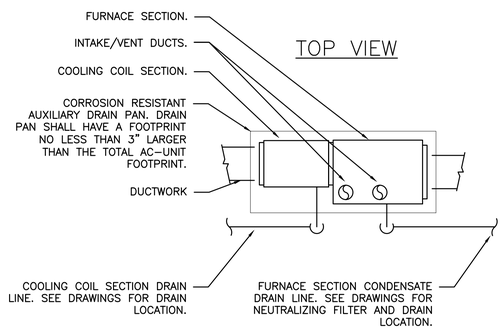

TOP VIEW

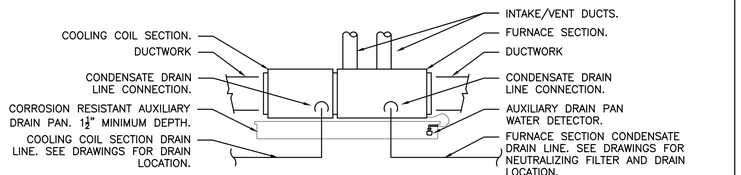

SIDE VIEW

NOTE:
1. THE AUXILIARY DRAIN PAN SHALL BE CONSTRUCTED OF CORROSION RESISTANT MATERIAL. METALLIC PANS SHALL HAVE A MINIMUM THICKNESS OF NOT LESS THAN 0.7MM GALVANIZED SHEET METAL. NON-METALLIC PANS SHALL HAVE A MINIMUM THICKNESS OF NOT LESS THAN 1.6MM.
2. THE AUXILIARY DRAIN PAN WATER DETECTION DEVICE SHALL CONFORM TO UL 508. THE DEVICE SHALL DISCONTINUE OPERATION OF THE AC-UNIT UPON DETECTION OF WATER IN THE AUXILIARY DRAIN PAN.

GF-UNIT/AC UNIT AUXILIARY DRAIN PAN DETAIL

Scale: None

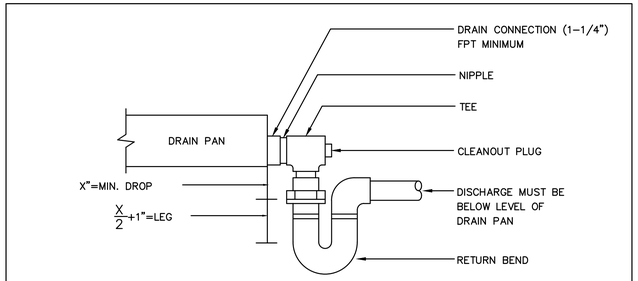

X=NEGATIVE INTERNAL STATIC PRESSURE AT FAN INLET

NOTES:
1. ALLOW SUFFICIENT SPACE BELOW DRAIN PAN FOR TRAP
2. PITCH DRAIN FOR PROPER RUN-OFF
3. MANUALLY, PRIME FILL TRAP BEFORE START-UP TO FORM INITIAL DRAIN SEAL
4. SUPPORT LENGTHY DRAIN LINES TO PREVENT SAG AND CONDENSATE OVERFLOW

DRAIN PAN WATER SEAL PIPING DETAIL

Scale: None

NOTE:
CLIP ACCU TO SLEEPER WITHOUT TRANSFERRING VIBRATION TO SLEEPER.

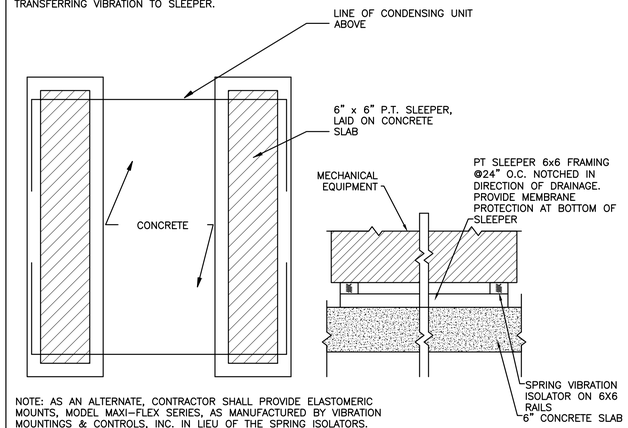

NOTE: AS AN ALTERNATE, CONTRACTOR SHALL PROVIDE ELASTOMERIC MOUNTS, MODEL MAXI-FLEX SERIES, AS MANUFACTURED BY VIBRATION MOUNTINGS & CONTROLS, INC. IN LIEU OF THE SPRING ISOLATORS.

ACCU MOUNTING DETAIL

Scale: None

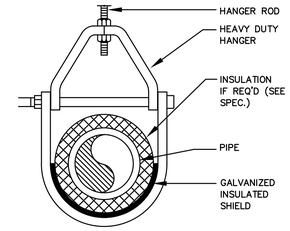

CLEVIS HANGER
(FOR PIPE SIZES 3" & UNDER)

PIPE HANGER ATTACHMENT DETAIL

Scale: None

PIPING NOTE:
ALL REFRIGERANT PIPING SHALL BE INSTALLED, SIZED AND INSULATED ACCORDING TO THE MANUFACTURERS SPECIFICATIONS. REFER TO MANUFACTURERS INSTALLATION MANUAL FOR ALL INSTALLATION INSTRUCTIONS AND RECOMMENDATIONS.

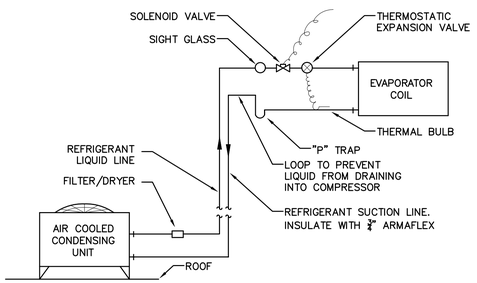

SPLIT SYSTEM PIPING DETAIL

NOTE:
INCREASE ALL DUCT DIMENSIONS TO ACCOMODATE DUCT LINING, FREE AREA SIZE SHALL BE AS SHOWN ON DWG'S.

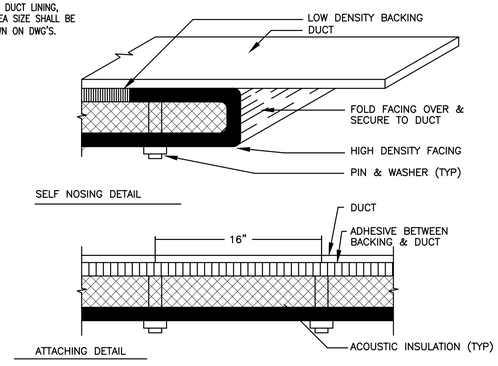

ACOUSTICAL DUCT LINING DETAIL

Scale: None

DRYER EXHAUST LENGTH CALCULATION:
(CHART BASED ON MODEL GE GFDN110EDWW AND GE GTDX400EDWS)

OPTION 1 (USE TRADITIONAL ELBOW):

ELBOW	LENGTH
0	90 FT
1	60 FT
2	45 FT
3	35 FT
4	25 FT

- FOR EVERY EXTRA 90° ELBOW, REDUCE THE ALLOWABLE VENT SYSTEM LENGTH BY 10 FT.
- TWO 45° ELBOWS WILL BE TREATED LIKE ONE 90° ELBOW.
- FOR THE SIDE EXHAUST INSTALLATIONS, ADD ONE 90° ELBOW TO THE CHART.
- LENGTH INCLUDES ALL HORIZONTAL AND VERTICAL RUNS.
- DRYER BOOSTER (FANTECH MODEL DEDPV-705) IS REQUIRED IF THE TOTAL VENT SYSTEM LENGTH DOES NOT MEET REQUIREMENTS.

OPTION 2 (USE DRYER ELL ELBOW):

ELBOW	LENGTH (BACK DISCHARGE)	LENGTH (SIDE DISCHARGE)
0	90 FT	90 FT
1	60 FT	60 FT
2	58.5 FT	45 FT
3	57 FT	43.5 FT
4	55.5 FT	41 FT

- PROVIDE DRYER ELL ELBOWS FOR ALL DRYER EXHAUST TURNS IN CEILING ONLY.
- FOR EVERY EXTRA 90° ELBOW, REDUCE THE ALLOWABLE VENT SYSTEM LENGTH BY 18 IN AND EVERY EXTRA 45° ELBOW, REDUCE THE ALLOWABLE VENT SYSTEM LENGTH BY 9 IN.
- TWO 45° ELBOWS WILL BE TREATED LIKE ONE 90° ELBOW.
- LENGTH INCLUDES ALL HORIZONTAL AND VERTICAL RUNS.
- DRYER BOOSTER (FANTECH MODEL DEDPV-705) IS REQUIRED IF THE TOTAL VENT SYSTEM LENGTH DOES NOT MEET REQUIREMENTS.

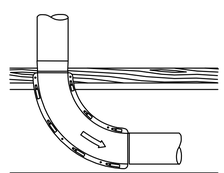

DRYER ELL DETAIL

Scale: None

WB&A
Wozny/Barbar & Associates, Inc.
CONSULTING ENGINEERS
1076 Washington Street
Hanover, MA 02339
Tel: (781) 826-4144
Fax: (781) 924-5792
www.wbassociates.com
161 Exchange Street
3rd Floor
Pawtucket, RI 02860

Date issued:

07.15.19

WINSLOW ARCHITECTS INC
89 MASSACHUSETTS AVE.
ARLINGTON, MA 02474
P: 781 648.6600
F: 781 648.6601
www.winslowarchitects.com

Owner/Developer:

MEDFIELD GREEN LLC.

Project:

MEDFIELD GREEN

Drawing:

Mechanical Details

Revisions:

No.	Description	Date

Stamp:

ANY REPRODUCTION, POSSESSION OR USE OF THIS DRAWING WITHOUT THE WRITTEN PERMISSION OF WINSLOW ARCHITECTS INC. IS PROHIBITED. VIOLATORS WILL BE PROSECUTED TO THE FULL EXTENT OF THE LAW.
© 2019 WINSLOW ARCHITECTS, INC.

Project number:

16-515

Sheet:

M-203

7/17/2019 10:32 AM

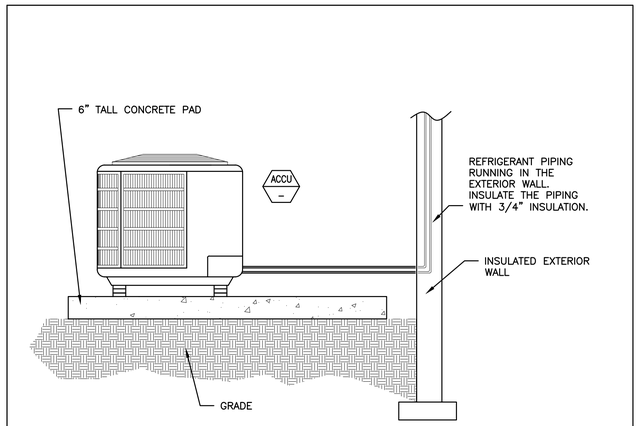

AIR COOLED CONDENSING PIPING WALL PENETRATION DETAIL
(NON-HEAT PUMP TYPE)

Scale: None

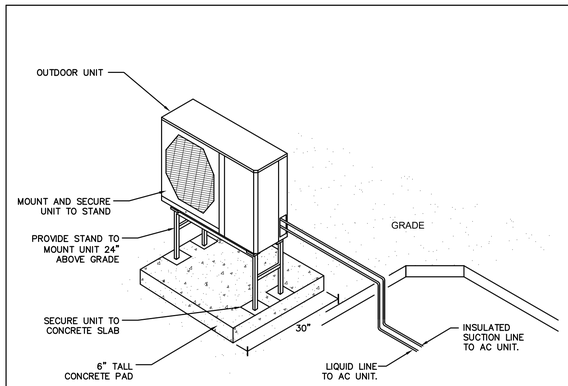

INSTALLATION NOTE:
ACTUAL INSTALLATION REQUIREMENTS WILL VARY BETWEEN MANUFACTURERS AND MODELS. REFER TO INSTALLATION MANUAL FOR ALL INSTALL INSRTUCTIONS AND RECOMMENDATIONS.

PIPING NOTE:
ALL REFRIGERANT PIPING SHALL BE INSTALLED, SIZED AND INSULATED ACCORDING TO MANUFACTURERS SPECIFICATIONS.

AIR COOLED CONDENSER GRADE/ROOF MOUNTING DETAIL

Scale: None

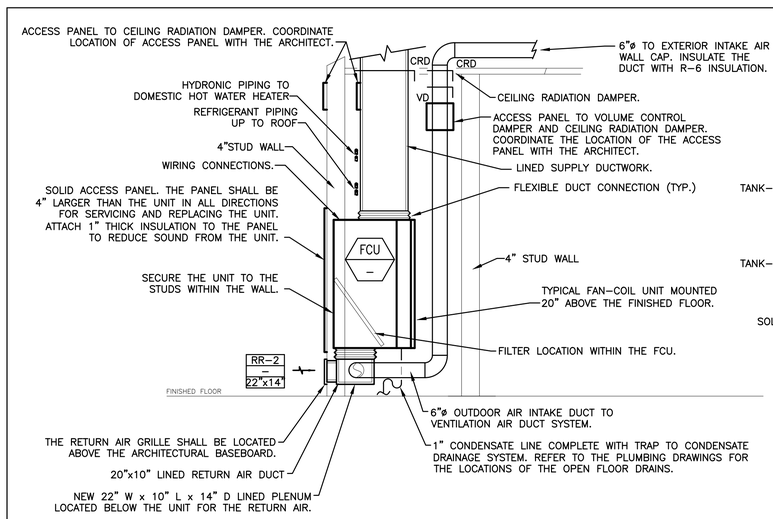

ELEVATION VIEW

REFRIGERANT PIPING UP TO ROOF. PROVIDE 1 SET OF REFRIGERANT PIPES FOR EACH INDOOR UNIT WITHIN THE STACK OF APARTMENTS. THE SIZING AND ROUTING OF THE PIPING SHALL BE AS PER THE MANUFACTURER'S INSTALLATION MANUAL. THERE MUST BE SUFFICIENT SPACE FOR EACH SET OF PIPES.

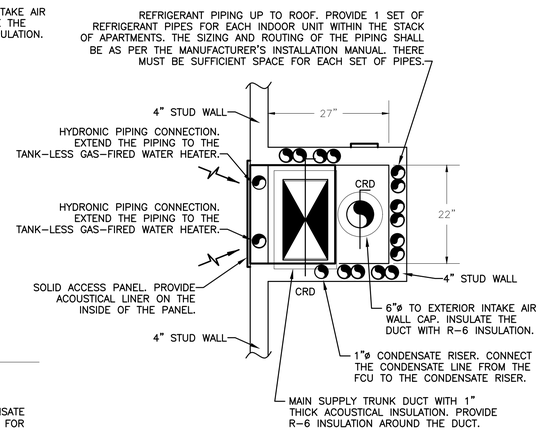

PLAN VIEW

05 TYPICAL VERTICAL APARTMENT AHU INSTALLATION DETAIL

Scale: None

WB&A
Wozny/Barbar & Associates, Inc.
CONSULTING ENGINEERS
1076 Washington Street
Hanover, MA 02339
Tel: (781) 826-4144
Fax: (781) 924-5792
www.wbassgineers.com
161 Exchange Street
3rd Floor
Pawtucket, RI 02860

Date issued:

07.15.19

WINSLOW ARCHITECTS INC

89 MASSACHUSETTS AVE.
ARLINGTON, MA 02474

P: 781 648.6600
F: 781 648.6601

www.winslowarchitects.com

Owner/Developer:

MEDFIELD GREEN LLC.

Project:

MEDFIELD GREEN

Drawing:

Mechanical Details

Revisions:

No.	Description	Date

Stamp:

ANY REPRODUCTION, POSSESSION OR USE OF THIS DRAWING WITHOUT THE WRITTEN PERMISSION OF WINSLOW ARCHITECTS INC. IS PROHIBITED. VIOLATORS WILL BE PROSECUTED TO THE FULL EXTENT OF THE LAW.

© 2019 WINSLOW ARCHITECTS, INC.

Project number:

16-515

Sheet:

M-204

7/17/2019 10:32 AM

LIGHTING FIXTURES

SYMBOL	DESCRIPTION	NOTES
FP 1a	WALL OR CEILING MOUNTED LIGHTING FIXTURE	UPPER CASE LETTERS INDICATE FIXTURE TYPE. REFER TO FIXTURE SCHEDULE FOR MANUFACTURER SUBSCRIPT LOWER CASE LETTERS INDICATE SWITCH CONTROL ASSOCIATIONS FR 1a FP 1a SHADING OF FIXTURES THUS: FR FP FP FP INDICATES FIXTURE ON NIGHT/EMERGENCY CIRCUIT OR EMERGENCY BATTERY BACK UP BALLAST WHERE APPLICABLE, CONTRACTOR SHALL CONFIRM LOCATION OF REMOTE EMERGENCY BALLAST WITH ARCHITECT PRIOR TO PURCHASE AND INSTALLATION. EMERGENCY BALLAST SHALL BE SIMILAR TO BODINE B30DT OR B30 WITH INTEGRAL INDICATOR LIGHT TEST SWITCH. PROVIDE 2 LAMP APPLICATION WHERE APPLICABLE. CONTRACTOR SHALL PROVIDE ALL MOUNTING HARDWARE APPLICABLE TO CEILING, WALL, AND FLOOR TYPE INTO WHICH FIXTURE IS INSTALLED CONTRACTOR SHALL COORDINATE MOUNTING HEIGHT WITH ARCHITECTURAL INTERIOR/EXTERIOR ELEVATIONS CONTRACTOR SHALL COORDINATE AND CONFIRM K RATING OF LAMPS TO ACHIVE COLOR AS PER ARCHITECT
	EXTERIOR POLE MOUNTED FIXTURE	CONTRACTOR SHALL FURNISH AND SUPPLY ANY STEP DOWN TRANSFORMERS FOR ANY LOW VOLTAGE LIGHTING

EMERGENCY LIGHTING

SYMBOL	DESCRIPTION	NOTES
EB	EMERGENCY LIGHTING WITH BATTERY UNIT	ALL EMERGENCY BATTERY PACKS SHALL HAVE REMOTE HEAD CAPABILITY UNLESS NOTED OTHERWISE
	DUAL REMOTE EMERGENCY LIGHTING HEAD	
	SINGLE REMOTE EMERGENCY LIGHTING HEAD	

EXIT SIGNS

SYMBOL	DESCRIPTION	NOTES
WP 1	CEILING MOUNTED EXIT SIGN	ALL EXIT SIGNS SHALL BE FURNISHED WITH INTERNAL, 90 MINUTE BATTERY UNLESS NOTED OTHERWISE
WP 1	WALL MOUNTED EXIT SIGN	APPLICATION OF SHADED QUADRANTS AND ARROWS THUS:
A	WALL MOUNTED EXIT SIGN W/ INTERNATIONAL ACCESSIBILITY SYMBOL TO BE INSTALLED AT ALL ACCESSIBLE EGRESS DOORS	INDICATE LETTERED FACE AND DIRECTIONAL CHEVERONS AS REQUIRED UPPER CASE LETTERS INDICATE REFERENCE TO LIGHTING FIXTURE SCHEDULE

WIRING DEVICES–SWITCHES

SYMBOL	DESCRIPTION	NOTES	
S WP	SINGLE POLE SWITCH	20A 120–277V AC "WP" – INDICATES WEATHER PROOF "K" DENOTES KEY SWITCH	SUBSCRIPT LOWER CASE LETTERS INDICATE SWITCH CONTROL ASSOCIATIONS SUBSCRIPT UPPER CASE LETTERS DENOTE SWITCH TYPE AS LISTED IN NON–STANDARD SWITCHES UNLESS NOTED OTHERWISE SWITCHES SHALL BE MOUNTED 48" TO CENTER LINE AFF
SP	SINGLE POLE SWITCH WITH PILOT LIGHT		
S2	DOUBLE POLE SWITCH		
S3	THREE–WAY SWITCH		
S4	FOUR–WAY SWITCH		
ST	SPRING WOUND INTERVAL TIME SWITCH	TORK OR EQUAL 30 MINUTE MAX	
D	LINEAR SLIDE BAR DIMMER SWITCH	1500W–120 VOLT RATING UNLESS NOTED OTHERWISE	
OS	CEILING MOUNTED CORRIDOR OCCUPANCY SENSOR (80' oc)	WATT STOPPER: W–2000H	CONTRACTOR SHALL FURNISH AND INSTALL ALL NECESSARY POWER PACKS, RELAYS, CABLES, AND CONTROL MODULES TO COMPLETE SYSTEM SUBSCRIPT LOWER CASE LETTERS INDICATE SWITCH LEG CONTROL
OS	CEILING MOUNTED DUAL TECHNOLOGY SENSOR (1,600 sf)	WATT STOPPER: DT–300	
OS	WALL MOUNTED DUAL TECHNOLOGY OCCUPANCY SENSOR	WATT STOPPER: DW–100	
OS ob	WALL MOUNTED DUAL TECHNOLOGY DUAL RELAY SENSOR	WATT STOPPER: DW–200	
OS	CEILING MOUNTED ON/OFF DAYLIGHT SENSOR	WATT STOPPER: LMLS–105	
OS	CEILING MOUNTED OCCUPANCY SENSOR WHEATHERPROOF	WATT STOPPER: HB300 HB–L2W	

LIGHTING CONTROL SYSTEM

SYMBOL	DESCRIPTION	NOTES
TC	7 DAY ASTRONOMICAL TIME CLOCK	TORK OR EQUAL
PC	WALL MOUNTED PHOTOCELL	
LC	LIGHTING CONTACTOR	
KS	KEY SWITCH LINE VOLTAGE	
MS	MASTER CONTROL SWITCH	

TELECOMMUNICATION SYSTEMS

SYMBOL	DESCRIPTION	NOTES
MHNC	MODULAR HOME NETWORK CENTER PROVIDE (1) DEDICATED 120V CIRCUIT & DOUBLE DUPLEX RECEPTACLE	MODULAR HOME NETWORKING PANEL SHALL BE LEVITON 47606–AHT IN 47605–140 ENCLOSURE OR EQUAL WITH 120V. RECEPTACLE
▽	WALL MOUNTED DATA OUTLET	4"x4" SQUARE OUTLET BOX WITH 1"C BACK TO TELEPHONE CLOSET P – DENOTES PUBLIC PAY PHONE W – DENOTES POWER FEED F – DENOTES MODULAR FURNITURE BEZEL (2)VOICE,(2)DATA OUTLETS BY OTHERS
▽	WALL MOUNTED COMBINATION TEL/DATA OUTLET	
▼	WALL MOUNTED TEL OUTLET	
T	FIRE RATED FURNITURE FEED POKE THROUGH DEVICE FOR TEL/DATA CONNECTIONS TO ELECTRIFIED FURNITURE	
T	4" SQUARE OUTLET BOX WITH 1 1/2" GROMMETTED HOLE COVERPLATE FOR TEL/DATA CONNECTION TO ELECTRIFIED FURNITURE PARTITIONS, MOUNTED 8" AFF	
TV	WALL MOUNTED CABLE TV OUTLET	4"x4" SQUARE OUTLET BOX WITH 1" CONDUIT STUBBED 6" ABOVE ACCESSIBLE CEILING SEE ARCH PLAN FOR MOUNTING HEIGHT
TV	CEILING MOUNTED CABLE TV OUTLET	
—CT—	CABLE TRAY	12" WIDE, 4" DEEP, CENTER SPLINE EQUAL TO WIREMOLD SPECMATE. PROVIDE ALL CONNECTORS AND HARDWARE FOR INSTALLATION OF LAYOUT SHOWN

WIRING DEVICES – RECEPTACLES

SYMBOL	DESCRIPTION	NOTES
1	WALL DUPLEX CONVENIENCE OUTLET MTD 18" AFF	20A/125V, 2P, 3W, GNDG., NEMA 5–20R SHADING OF SYMBOL THUS:
	CEILING MOUNTED DUPLEX CONVENIENCE OUTLET	INDICATES RECEPTACLE WITH EACH HALF SEPARATELY WIRED. (HALF CONSTANT HALF SWITCH CONTROLLED.)
IG	ISOLATED GROUND DUPLEX CONVENIENCE OUTLET	"1–" INDICATES CIRCUIT NUMBER SUBSCRIPT LOWER CASE LETTERS INDICATE SWITCH CONTROL ASSOCIATIONS SHADING OF SYMBOL THUS:
	WALL DOUBLE DUPLEX CONVENIENCE OUTLET	INDICATES RECEPTACLE MTD 6" ABOVE COUNTER TO CENTER LINE OR 48" AFF UNLESS NOTED OTHERWISE
H	HOSPITAL GRADE DUPLEX CONVENIENCE OUTLET	"WP" – INDICATES WEATHER PROOF "GFI" DENOTES GROUND FAULT INTERRUPTING TYPE RECEPTACLE
	WALL MTD SINGLE CONVENIENCE OUTLET	ALL POWER OUTLET FACEPLATES SHALL BE LABELED WITH CIRCUIT NUMBER AND PANEL DESIGNATION FEEDING OUTLET
9	WALL MOUNTED SPECIAL PURPOSE POWER RECEPTACLE	NUMERAL WITHIN SQUARE DENOTES RECEPTACLE TYPE AS LISTED IN SCHEDULE OF NON–STANDARD RECEPTACLES
P	FIRE RATED FURNITURE FEED POKE THRIUGH DEVICE FOR POWER CONNECTIONS TO ELECTRIFIED FURNITURE	
P	4" SQUARE OUTLET BOX TO OUTLETS LOCATED IN FURNITURE PARTITIONS (SEE FLOOR PLANS)	

WIRING DEVICES – MISCELLANEOUS

SYMBOL	DESCRIPTION	NOTES
PP	2 CHANNEL PWR/DATA POWER POLE WITH ELEC DEVICES AND PLATES	WIREMOLD AMDPT SERIES OR EQUAL
	2 PIECE SURFACE MTD RACEWAY WITH 20A DUPLEX RECEPTACLES SPACING AS SHOWN ON ELECTRICAL PLANS	WIREMOLD OR EQUAL
	2 PIECE MULTI–CHANNEL RACEWAY WITH 20A DUPLEX RECEPTACLES AND DATA OUTLETS SPACING AS SHOWN ON ELECTRICAL PLANS	WIREMOLD OR EQUAL
	FLUSH FLOOR MOUNTED POWER/DATA CONVIENCE RECEPTACLES	POKE THRU APPLICATION: 2 HOUR RATED. WIREMOLD RC SERIES OR EQUAL. COORDINATE FINAL POWER AND TEL/DATA TERMAINTIONS WITH TENANT FLOOR TRENCH APPLICATION: DEEP RECTANGULAR CAST IRON BOX WIREMOLD OR EQUAL PROVIDE 1"C FROM TEL/DATA TO 6" AFF. CONTRACTOR SHALL SUPPLY ALL COVERS AND FACE PLATES SPECIFIC TO SERIES

JUNCTION BOXES

SYMBOL	DESCRIPTION	NOTES
J	CEILING MOUNTED JUNCTION BOX	
J	WALL MOUNTED JUNCTION BOX	
J	SURFACE MOUNTED JUNCTION BOX	
J	FLUSH FLOOR MOUNTED JUNCTION BOX	
PB	PULL BOX	
J	JUNCTION BOX WITH FLEXIBLE CONNECTION TO EQUIPMENT	P – DENOTES POWER FEED C – DENOTES COMMUNICATIONS FEED HD– DENOTES HAND DRYER HT– DENOTES HEAT TRACE

MOTORS AND CONTROLS

SYMBOL	DESCRIPTION	NOTES	
	MOTOR	COMPLETE INFO. FOR MOTOR IS INDICATED BY APPLICATION OF INDEXING SYMBOLS REFERENCE TO SCHEDULE OF MECHANICAL EQUIPMENT	
	MAGNETIC MOTOR STARTER COMPLETE W/ THERMAL OVERLOAD PROTECTION	SUBSCRIPT INDICATES NEMA SIZE	COMPLETE INFORMATION FOR CONTROL ITEMS IS INDICATED BY THE APPLICATION OF INDEXING SYMBOL REFERENCE APPLIED TO ASSOCIATED EQUIP.
	MANUAL MOTOR STARTER (THERMAL OVERLOAD SWITCH)		
VFD	VARIABLE FREQUECY DRIVE	REFER TO HVAC SCHEDULE FOR MOTOR LOAD HORSEPOWER SIZE	
CP	CONTROL PANEL (MECHANICAL EQUIP)	FURNISHED AND INSTALLED BY OTHERS. WIRED BY THE ELECTRICAL CONTRACTOR	

DISTRIBUTION EQUIPMENT

SYMBOL	DESCRIPTION	NOTES
	SURFACE MOUNTED PANEL	
	FLUSH MOUNTED PANEL	
TVSS	SURGE SUPPRESSION	PROVIDE PER SPECIFICATIONS
T	TRANSFORMER	SEE ELECTRICAL PLANS FOR KVA RATING
	GROUNDING PER SPECIFICATION	
M	METER SOCKET AND METER	METER SOCKET PROVIDED BY CONTRACTOR PROVIDED BY LOCAL UTILITY CO.
	OVERCURRENT AND/OR SWITCHING DEVICE "WP" – INDICATES WEATHER PROOF	COMPLETE INFORMATION FOR DEVICES IS INDICATED BY APPLICATION OF TAG SYMBOLS 30 INDICATES UNFUSED SWITCH 30 – FRAME SIZE 30/15 INDICATES FUSED SWITCH 30 – FRAME SIZE 15 – FUSE SIZE INDICATES ENCLOSED CIRCUIT BREAKER 30/15 INDICATES COMBINATION FUSED SWITCH AND STARTER 30 – FRAME SIZE 15 – FUSE SIZE INDICATES COMBINATION ENCLOSED CIRCUIT BREAKER AND STARTER INDICATES BY OTHERS
	WALL MOUNTED EMERGENCY POWER OFF BUTTON	

BRANCH CIRCUITRY

SYMBOL	DESCRIPTION	NOTES
	LIGHTING AND APPLIANCE BRANCH CIRCUITRY CONCEALED ABOVE	ARROW HEAD INDICATES HOME RUN CIRCUITRY TO 20A–1P CIRCUIT BREAKER (UNLESS NOTED OTHERWISE) NUMBER OF ARROW HEADS INDICATE NUMBER OF BRANCH POLES REQUIRED IN PANEL
	LIGHTING AND APPLIANCE BRANCH CIRCUITRY CONCEALED BELOW	CROSS MARKS INDICATE NUMBER OR NO. 12 WIRES IN 3/4" CONDUIT PLUS GROUND. ABSENCE OF CROSSMARKS INDICATES 2#12, 1#12 GROUND
	LIGHTING AND APPLIANCE BRANCH RUN EXPOSED	HOME RUNS ARE INDICATED THUS: LL2 – 1, 3, 5 "LL2" DENOTES PANEL DESIGNATION. "1,3,5" DENOTES CIRCUIT NO'S 1,3,5 CONTAINING 20A, 1P. CB'S IN PANELBOARD
	INDIVIDUAL RUN TURNING UP	
	INDIVIDUAL RUN TURNING DOWN	CONDUIT RUNS REQUIRING CIRCUIT BREAKER GREATER THAN 20A–1P WIRE SIZE GREATER THAN NO. 12 AND CONDUIT SIZE GREATER THAN 3/4" ARE NOTED NOTED THUS: LL2–1, 3, 5 50A 3P 4 #4, 1 #8 GROUND 1–1/4" CONDUIT
	INDIVIDUAL RUN TURNING UP&DOWN	

GENERAL CIRCUITRY

SYMBOL	DESCRIPTION	NOTES
	BUSWAY	
	CIRCUIT BREAKER BUS PLUG, BREAKERS AS INDICATED	
	BUSWAY FEED/ LUG CONNECTION	
PE	IDENTIFICATION OF INDIVIDUAL RUN OTHER THAN BRANCH CIRCUITRY OR SECONDARY FEEDERS	PE – PRIMARY ELECTRIC SE – SECONDARY ELECTRIC TEL – TELEPHONE TV – TELEVISION CATV – CABLE TELEVISION E – EMERGENCY

SECONDARY FEEDERS

SYMBOL	DESCRIPTION	NOTES
	FEEDER RUN CONCEALED ABOVE	ARROW HEAD INDICATES HOME RUN TO PANEL BOARD
	FEEDER RUN CONCEALED BELOW	FEEDER SIZING SHOWN ON POWER RISER DIAGRAM
	FEEDER RUN AS PER SPECIFIC NOTATION	

TAG SYMBOLS

SYMBOL	DESCRIPTION	NOTES
	INDEX SYMBOL	HEXAGONAL SYMBOLS CONTAINING TWO UPPER CASE LETTERS INDICATE REFERENCE TO A SCHEDULE OF SPECIAL EQUIPMENT HEXAGONAL SYMBOLS CONTAINING UPPER CASE LETTERS AND NUMERICALS INDICATE REFERENCE TO SCHEDULE OF MECHANICAL EQUIPMENT HEXAGONAL SYMBOLS CONTAINING NUMERICALS ONLY INDICATE REFERENCE TO AN EXPLANATION OF ELECTRICAL WORK REQUIREMENT
	GANGING CROSS REFERENCE	THE NOTED INDICATION ADJACENT TO A DEVICE DENOTES THAT THE DEVICE IS TO BE GANGED IN A BOX WITH ANOTHER DEVICE SIMILARLY NOTED AT THE SAME LOCATION ON ANOTHER DRAWING
( )	SPECIAL MOUNTING HEIGHT INDICATIONS	DIMENSION NOTED IN PARENTHESIS ADJACENT TO ANY ITEM OF THE DRAWINGS INDICATES THE HEIGHT OF IT'S HORIZONTAL CENTERLINE ABOVE FINISHED FLOOR
•	MOUNTING HEIGHT REFERENCE TO ARCHITECTURAL DRAWINGS	
	LINE INDICATING PHYSICAL SIZE OF ELECTRICAL ITEMS	INDICATION USED CIRCUMSCRIBING OTHER SYMBOLS TO DELINEATE PHYSICAL SIZE
	DETAIL TITLE ANNOTATION INDICATING DETAIL NUMBER	
	WIRING DEVICE GANGING SYMBOL	GANGING SYMBOL SHOWN IN CIRCUITRY RUN IN COMBINATION WITH ANY WIRING DEVICE SYMBOL THUS: S S S S DENOTES WIRING DEVICES WHICH ARE TO BE GANGED IN A COMMON PLATE OUTLET

AREA OF RESCUE/REFUGE SYSTEM

SYMBOL	DESCRIPTION	NOTES	
ARCU	AREA OF RESCUE MAIN CONTROL PANEL	CORNELL: A–4800M SERIES OR EQUAL	CONTRACTOR SHALL FURNISH AND INSTALL ALL NECESSARY POWER PACKS AND EXPANSION SWITCHES TO COMPLETE SYSTEM. PROVIDE 120V POWER AT EACH DEVICE POWER PACK: CORNELL: B–5248A WITH BATTERY OR P–5122A3A WITH LIFE SAFETY CIRCUIT OR EQUAL EXPANSION SWITCH: CORNELL: ES–4808 OR EQUAL
ARA	AREA OF RESCUE INDICATOR LIGHT WITH BATTERY BACKUP	CORNELL: SN–B SERIES OR EQUAL	
RB	AREA OF RESCUE CALL STATION	CORNELL: 4800V SERIES OR EQUAL	

FIRE ALARM SYSTEM

SYMBOL	DESCRIPTION	NOTES
F	MANUAL FIRE ALARM PULL STATION	
F	FIRE FIGHTER FIRE EMERG PHONE	
F	VISUAL ONLY FIRE ALARM DEVICE	
F	COMBINATION AUDIO AND VISUAL FIRE ALARM DEVICE	
F C	CEILING MOUNTED AUDIO AND VISUAL FIRE ALARM DEVICE	
S	WALL MOUNTED FIRE ALARM SPEAKER	
S	WALL MOUNTED FIRE ALARM SPEAKER AND STROBE	
M	WALL MOUNTED MINI–HORN	
M	WALL MOUNTED FIRE ALARM MINI–HORN & STROBE	
F	FIRE ALARM JUNCTION BOX	
K	KNOX BOX	
HB	ROTATING FIRE ALARM BEACON LIGHT	LF LOW FREQUENCY ALARM 520HZ IN ALL ROOMS USED FOR SLEEPING
EP	ELECTRIC BELL PROVIDE (1) DEDICATED 120V CIRCUIT	BS LOW FREQUENCY ALARM GENERATOR WITH BED SHAKER
FACP	FIRE ALARM CONTROL PANEL	COMBINATION SMOKE DETECTOR/ VISUAL ALARM FOR HEARING IMPAIRED.
FAA	FIRE ALARM ANNUNCIATOR PANEL	COMBINATION HEAT DETECTOR/ VISUAL ALARM FOR HEARING IMPAIRED.
RTS	REMOTE TEST STATION	CO CEILING MOUNTED CARBON MONOXIDE DETECTOR
HR	REMOTE INDICATOR ALARM DEVICE	CO WALL MOUNTED CARBON MONOXIDE DETECTOR
S	SMOKE DETECTOR	DETECTOR TYPE SUBSCRIPT: L LOCAL 120V DETECTOR R RECEIVER UNIT T TRANSMITTER UNIT D IN DUCT DETECTOR E ELEVATOR RECALL B BEAM TYPE PHOTOELECTRIC SA SUPPLY AIR DUCT DETECTOR RA RETURN AIR DUCT DETECTOR CO COMBINATION SMOKE/CARBON MONOXIDE DETECTOR
H	HEAT DETECTOR	
S H	WALL MOUNTED SMOKE OR HEAT DETECTOR	
FS TS PS	SPRINKLER SYSTEM MONITOR FS WATER FLOW TS TAMPER SWITCH PS DRY ALARM PRESSURE SWITCH	MONITOR TYPE: MM MONITORING MODULE CM CONTROL MODULE
DH	MAGNETIC DOOR HOLDER	PROVIDE CONNECTION TO DOOR HARDWARE INTEGRAL HOLDERS

SECURITY/INTERCOM/ACCESS SYSTEMS

SYMBOL	DESCRIPTION	NOTES
DB PB	DOOR BELL PUSH BUTTON	EXTERIOR APPLICATION: EDWARDS OR EQUAL
DB C	DOOR BELL CHIME/BELL	
CR	CARD READER	KP KEY PAD
DC	DOOR CONTACT	ES ELECTRIC DOOR STRIKE
LA	LOCAL DOOR ALARM	VC INTERCOM SPEAKER VOLUME CONTROL
IS	VIDEO INTERCOM STATION TALK/ACCESS	INTP MAIN VIDEO INTERCOM PANEL
MD	WALL MOUNTED MOTION DETECTOR	GP CEILING MOUNTED PUBLIC ADDRESS SPEAKER
MD	CEILING MOUNTED MOTION DETECTOR	CCTV CLOSED CIRCUIT TELEVISION CAMERA
SCP	SECURITY CONTROL PANEL	IAP INTRUSION ALARM PANEL
HC	HANDICAP ACCESS PUSH BUTTON	

MOUNTING HEIGHTS

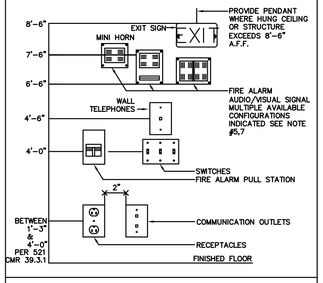

NOTES

1.) ALL MOUNTING HEIGHTS SHALL BE MEASURED FROM FINISHED FLOOR TO CENTERLINE OF DEVICE EXCEPT EXIT SIGNS

2.) DEVICES SHALL BE INSTALLED ON A COMMON VERTICAL CENTERLINE WHEREVER POSSIBLE.

3.) ALL DEVICES SHALL BE INSTALLED AT MOUNTING HEIGHTS AS INDICATED ON THIS DETAIL UNLESS OTHERWISE NOTED.

4.) REFER TO THE ARCHITECTS ELEVATION DETAILS FOR EXACT HEIGHT AND LENGTH OF SURFACE RACEWAYS.

5.) WALL MOUNTED VISUAL APPLIANCE THE ENTIRE LENS OF A/V SIGNAL OR VISUAL–ONLY SIGNAL IS NOT LESS THAN 80" AND NOT GREATER THAN 96" A.F.F. CONTRACTOR SHALL CONTACT ENGINEER IF PERFORMANCE BASED ALTERNATIVE (NFPA 72 7.5.4.5) IS REQUIRED DUE TO CEILING HEIGHTS.

6.) ALL LOAD CENTERS LOCATED WITHIN GROUP I & GROUP II UNITS SHALL BE MOUNTED WITH BREAKER A MAXIMUM OF 54" A.F.F. AND 18" FROM INTERIOR CORNER.

7.) ALL WALL MOUNTED AUDIBLE NOTIFICATION APPLIANCES SHALL HAVE THEIR TOPS ABOVE THE FINISHED FLOORS AT HEIGHTS OF NOT LESS THAN 90" (7'6") AND BELOW THE FINISHED CEILINGS AT DISTANCES NOT LESS THAN 6".

GENERAL NOTES

1. ALL CONDUITS AND EQUIPMENT SHALL BE INSTALLED AND GROUND IN ACCORDANCE WITH THE LATEST RULES AND REGULATIONS OF THE APPLICABLE LOCAL AND NATIONAL CODES.
2. CONDUIT RUNS ARE SHOWN DIAGRAMMATICALLY ONLY AND SHALL BE INSTALLED IN A MANNER TO PREVENT CONFLICTS WITH EQUIPMENT AND STRUCTURAL CONDITIONS. EXPOSED CONDUITS SHALL BE INSTALLED PARALLEL TO BEAMS AND WALLS. EMPTY CONDUITS SHALL HAVE NYLON PULL LINE
3. CONDUITS SHALL BE TERMINATED SO AS TO PERMIT NEAT CONNECTIONS TO MOTORS AND OTHER EQUIPMENT.
4. NO CONDUIT SMALLER THAN 3/4", NOR WIRE SIZE SMALLER THAN NO. 12 A.W.G. FOR POWER SHALL BE USED UNLESS OTHERWISE NOTED.
5. THE WIRING DIAGRAMS, QUANTITY AND SIZE OF THE WIRES AND CONDUIT REPRESENT A SUGGESTED ARRANGEMENT BASED UPON SELECTED STANDARD COMPONENTS OF ELECTRICAL EQUIPMENT. MODIFICATIONS ACCEPTABLE TO THE CONSTRUCTION MANAGER MAY BE MADE BY THE CONTRACTOR TO ACCOMMODATE EQUIPMENT ACTUALLY PURCHASED. THE BASIC SEQUENCE AND METHOD OF CONTROL MUST BE MAINTAINED AS INDICATED ON THE DRAWINGS AND/OR SPECIFICATIONS.
6. SWITCHES SHALL BE MOUNTED 4'–0" ABOVE FINISHED FLOOR UNLESS OTHERWISE NOTED. RECEPTACLES SHALL BE MOUNTED 18" AFF.
7. ALL SURFACE MOUNTED PANELS AND PANELBOARDS ON THE INSIDE OF EXTERIOR WALLS ABOVE GRADE OR IN OTHER LOCATIONS CONSIDERED AS DAMP, SHALL BE MOUNTED SO AS TO MAINTAIN A 1/4" AIR SPACE BETWEEN THE ENCLOSURE AND THE WALL.
8. ALL PANELBOARDS SHALL BE MOUNTED SO THAT THE DISTANCE FROM THE TOP CIRCUIT BREAKER OPERATING HANDLE TO THE FLOOR SHALL NOT EXCEED 6'–6".
9. LIGHTING FIXTURES SHALL BE MOUNTED ACCORDING TO THE MOUNTING HEIGHT GIVEN ON THE DRAWINGS. WITH THE DISTANCE BEING MEASURED FROM THE BOTTOM OF THE LIGHTING FIXTURE TO THE FINISHED FLOOR.
10. FOR LOCATION OF HVAC, PLUMBING, FIRE PROTECTION, AND MISCELLANEOUS EQUIPMENT SEE RESPECTIVE TRADE DRAWINGS.
11. ALL CONDUIT RUNS CROSSING EXPANSION JOINTS SHALL HAVE EXPANSION OR EXPANSION AND DEFLECTION TYPE FITTINGS AS REQUIRED. FOR EXACT LOCATIONS OF EXPANSION JOINTS SEE STRUCTURAL DRAWINGS.
12. ALL MOTOR STARTER CONTROL TRANSFORMERS SHALL BE SIZED TO PROVIDE SUFFICIENT VOLT–AMPERE CAPACITY FOR OPERATING ALL ELECTRICAL DEVICES ASSOCIATED WITH CONTROL OF THE MOTOR, IN ADDITION TO THE STARTER COIL. IT SHALL INCLUDE RELAYS, TIMERS, MOTOR HEATERS, INDICATING LIGHTS, ETC.
13. CONDUIT AND WIRE (NOT SHOWN) FOR FIXTURES, SWITCHES AND/OR RECEPTACLES SHALL BE FURNISHED AND INSTALLED BY THE ELECTRICAL CONTRACTOR AND SHALL BE:
    a. 3/4" (MIN.) CONDUIT RUN
    1. EXPOSED IN UNFINISHED AREAS.
    2. CONCEALED ABOVE HUNG CEILINGS AND IN WALLS IN FINISHED AREAS.
    b. NO.12 (MIN.) Cu WIRE (MIN.) TYPE "THWN/THHN"
    NO. OF WIRES AS REQUIRED.
14. FOR EQUIPMENT PAD CONSTRUCTION DETAILS SEE STRUCTURAL DRAWINGS.
15. ALL 120V BRANCH CIRCUITS GREATER THAN 100 LINEAR FEET SHALL BE #10AWG MIN.
16. THE ELECTRICAL CONTRACTOR SHALL PROVIDE LAYOUTS FOR ALL ELECTRICAL ROOMS BASED ON ACTUAL EQUIPMENT OF MANUFACTURER SELECTED, SUBMIT FOR REVIEW PRIOR TO INSTALLATION.
17. PROVIDE ELECTRICAL OUTLET PLATE GASKET SEALS AT RECEPTACLES, SWITCHES AND OTHER ELECTRICAL DEVICES ON EXTERIOR WALLS AND ON INTERIOR WALLS BETWEEN CONDITIONED AND NON–CONDITIONED SPACES.
18. THE ELECTRICAL CONTRACTOR SHALL SUBMIT A PLAN FOR APPROVAL SHOWING ALL ELECTRICAL, TELEPHONE, SECURITY, FIRE ALARM, COMMUNICATION AND OTHER SYSTEMS CONDUITS IN SLAB AND ABOVE CEILING ETC.. COORDINATE WITH OTHER TRADES AND BUILDING'S STRUCTURE TO AVOID ANY CONFLICT.
19. ALL TERMINATION LUGS SHALL BE SIZED ACCORDINGLY TO ACCOMMODATE INDICATED CONDUCTORS.
20. THE ELECTRICAL CONTRACTOR SHALL SUBMIT PLANS FOR APPROVAL SHOWING ALL COMMUNICATIONS EQUIPMENT AND DEVICES THROUGHOUT THE BUILDING. THE ELECTRICAL CONTRACTOR SHALL ALSO LABEL AND IDENTIFY ALL CONDUITS THAT SERVE DIFFERNT SYSTEMS.
21. REFER TO THE ARCHITECTURAL REFLECTED CEILING PLANS AND ELEVATIONS FOR EXACT LOCATIONS OF ALL LIGHT FIXTURES.
22. COORDINATE LOCATIONS OF ALL LIGHT FIXTURES IN MECHANICAL AND ELECTRICAL ROOMS WITH LAYOUT OF EQUIPMENT, PIPING AND DUCTWORK.
23. ALL EXIT SIGNS SHALL BE UNSWITCHED.
24. ALL SWITCHED LIGHT FIXTURES CIRCUITED TO A NORMAL/EMERGENCY CIRCUIT ARE TO BE WIRED WITH AN EMERGENCY BY–PASS RELAY.
25. ALL 20 AMPERE, SINGLE POLE CIRCUITS SHALL BE PROVIDED WITH A SEPARATE FULL SIZE NEUTRAL CONDUCTOR.
26. CONFIRM EXACT POWER REQUIREMENTS AND CONNECTION LOCATIONS FOR ALL EQUIPMENT WITH THE PLUMBING, FIRE PROTECTION, HVAC AND GENERAL CONTRACTOR.
27. PROVIDE AN SOU KIT FOR ALL MECH EQUIPMENT RATED LESS THAN 1/2HP (TYP)
28. CERTAIN SYMBOLS IN THE SYMBOL LIST DO NOT APPEAR ELSEWHERE IN THE DRAWINGS. SUCH SYMBOLS ARE INCLUDED TO PERMIT INTERPRETATIONS TO BE MADE IN THE EVENT OF DESIGN CHANGES.
29. ELECTRICAL CONTRACTOR SHALL MAINTAIN RATING OF ANY CEILING, WALL, FLOOR OR ANY BUILDING STRUCTURE THAT ANY ELECTRICAL SYSTEM PENETRATES. SEE ARCHITECTURAL PLAN FOR RATINGS.
30. ELECTRICAL CONTRACTOR SHALL CONFIRM THAT ALL SUBMITTED LED DRIVERS ARE FCC COMPLIANT AND THAT ALL SUBMITTED LIGHTING FIXTURES ARE UL LISTED.

ABBREVIATIONS

ABBR	ABBREVIATIONS	L	LENGTH
A/AMP	AMPERE	LA	LIGHTNING ARRESTOR
AC	ALTERNATING CURRENT	LP	LIGHTING PANEL
A/C	AIR CONDITIONING	LTG	LIGHTING
AFF	ABOVE FINISHED FLOOR	LV	LOW VOLTAGE
AFG	ABOVE FINISHED GRADE		
ARCH	ARCHITECTURAL	M	METER
ATC	AUTOMATIC TEMPERATURE CONTROL	MM	MILLIMETER
		MCB	MAIN CIRCUIT BREAKER
ATS	AUTOMATIC TRANSFER SWITCH	MEC	MASS ELECTRIC COMPANY
AUTO	AUTOMATIC	MECH	MECHANICAL
		MFR	MANUFACTURER
BAT	BATTERY	MLO	MAIN LUG ONLY
BIS	BYPASS ISOLATOR SWITCH	MISC	MISCELLANEOUS
		MTD	MOUNTED
C	CONDUIT		
CATV	CABLE TELEVISION	N	NEUTRAL
CAB	CABINET	N/C	NORMALLY CLOSED
CB	CIRCUIT BREAKER	NEC	NATIONAL ELECTRIC CODE
CCTV	CLOSED CIRCUIT TELEVISION		
CKT	CIRCUIT	NEMA	NATIONAL ELECTRICAL MANUFACTURERS ASSOCIATION
CL	CENTERLINE		
CM	CENTIMETER		
CLG	CEILING	NIC	NOT IN CONTRACT
CO	COMPANY	NL	NIGHT LIGHTING CKT
COL	COLUMN	N/O	NORMALLY OPEN
C/T	CURRENT TRANSFORMER	NO	NUMBER
CW	COOL WHITE		
		OC	ON CENTER
DET	DETAIL	O/C	OVERCURRENT
DIA	DIAMETER	OL	OVERLOAD
DISC	DISCONNECT		
DN	DOWN	PB	PULL BOX
DP	DISTRIBUTION PANEL	PH	PHASE
DPDT	DOUBLE POLE DOUBLE THROW	PNL	PANEL
		PP	PUMP
DPST	DOUBLE POLE SINGLE THROW	PRI	PRIMARY
		P/T	POTENTIAL TRANSFORMER
DT	DUST TIGHT		
DWG	DRAWING	PVC	POLYVINYL CHLORIDE
		PWR	POWER
EA	EACH		
EC	ELECTRICAL CONTRACTOR	RECEPT	RECEPTACLE
EL	ELEVATION	REC	RECESSED
ELEC	ELECTRIC	RPA	RELAY PANEL
ELEV	ELEVATOR		
ES	ENERGY SAVING		
EX	EXISTING	SEC	SECONDARY
		SP	SPARE
FDR	FEEDER	SPECS	SPECIFICATIONS
FLR	FLOOR

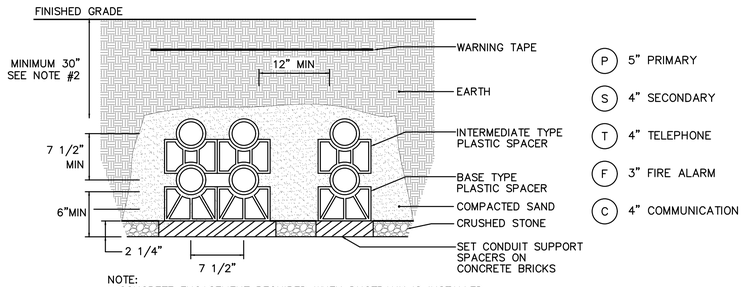

NOTE:
1. CONCRETE ENCASEMENT REQUIRED WHEN DUCTBANK IS INSTALLED UNDER VEHICULAR TRAFFIC AREAS, ROADS ETC.
2. REFER TO NEC TABLE 300.5 FOR MINIMUM COVER REQUIREMENTS FOR INSTALLATIONS BELOW GRADE & BELOW SLAB.

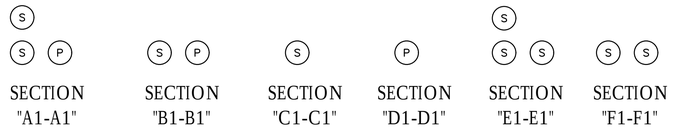

2 Typical Ductbank Detail

Scale:None

1 Electrical Site Plan

Scale:1"=20'-0"

WB&A
Wozny/Barbar & Associates, Inc.
CONSULTING ENGINEERS
1076 Washington Street
Hanover, MA 02339
Tel: (781) 826-4144
Fax: (781) 924-5792
www.wbaengineers.com
161 Exchange Street
3rd Floor
Pawtucket, RI 02860

Date issued:

07.15.19

WINSLOW ARCHITECTS INC
89 MASSACHUSETTS AVE.
ARLINGTON, MA 02474
P: 781 648.6600
F: 781 648.6601
www.winslowarchitects.com

Owner/Developer:

MEDFIELD GREEN LLC.

Project:

MEDFIELD GREEN

Drawing:

Electrical Site Plan

Revisions:

No.	Description	Date

Stamp:

ANY REPRODUCTION, POSSESSION OR USE OF THIS DRAWING WITHOUT THE WRITTEN PERMISSION OF WINSLOW ARCHITECTS INC. IS PROHIBITED. VIOLATORS WILL BE PROSECUTED TO THE FULL EXTENT OF THE LAW.

© 2019 WINSLOW ARCHITECTS, INC.

Project number:

16-515

Sheet:

E-002

7/16/2019 4:12 PM

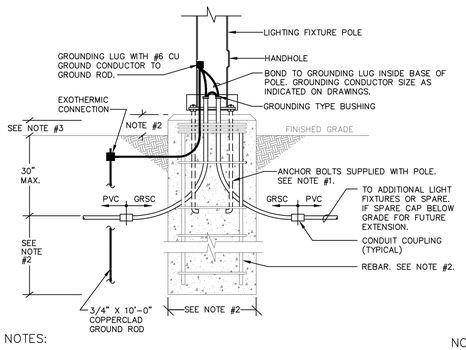

NOTES:

1. FURNISH GENERAL CONTRACTOR WITH POLE BASE BOLT TEMPLATE PRIOR TO CONCRETE POUR.
2. REFER TO SITE CIVIL ENGINEER FOR POLE BASE HEIGHT, SIZE AND REBAR REQUIREMENTS.
3. COORDINATE EXACT ANCHOR BOLT REQUIREMENTS WITH SITE CIVIL ENGINEER e.g. BREAK-AWAY TYPE.

3 Typical Site Lighting Pole Base Detail

Scale: None

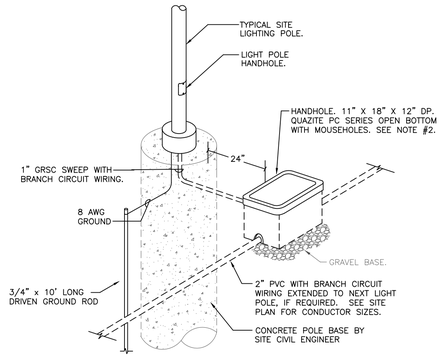

NOTES:

1. INSTALLATION TYPICAL FOR LANDSCAPED OR PAVED SIDEWALK AREAS. HANDHOLE SHALL NOT BE LOCATED IN TRAFFIC AREAS. COORDINATE COVER AND FRAME COLOR OF HANDHOLE WITH ARCHITECT.
2. PROVIDE IN-LINE, WATERPROOF FUSE HOLDER-BUSS "TRON", TYPE HEB OR HEX, AS REQUIRED.
3. REFER TO TYPICAL LIGHT POLE BASE DETAIL.

2 Typical Site Lighting/Fixture Handhole Detail

Scale: None

NOTES:

1. COORDINATE EXACT FIXTURE LOCATIONS AND QUANTITIES WITH LANDSCAPE PLANS.
2. CIRCUIT NUMBER DESIGNATIONS ARE INTENDED TO ILLUSTRATE BRANCH WIRING CONFIGURATION ONLY.
3. ELECTRICAL CONTRACTOR SHALL COORDINATE AND CONFIRM K RATING (TEMPERATURE) OF FIXTURE LAMPS TO ACHIEVE COLOR AS PER CONSULTANT.
4. ELECTRICAL CONTRACTOR SHALL PROVIDE AND INSTALL ANY STEP DOWN TRANSFORMERS, LOW VOLTAGE WIRING, DRIVERS, JUMPER CABLES, HARNESSES AND CONTROLS FOR ALL LOW VOLTAGE LIGHTING
5. ALL EXPOSED AND SURFACE MOUNTED RACEWAY SHALL BE GALVANIZED RIGID STEEL OR EQUAL. CONFIRM ROUTING WITH SITE CIVIL ENGINEER.
6. ELECTRICAL CONTRACTOR SHALL PROVIDE WITHIN HANDHOLES, BETWEEN THE #2 CONDUCTORS, AND THE #10 FEEDS TO THE FIXTURES, IN-LINE, FUSED, SPLICE KITS. QUICK CONNECT TYPE WITH 1/2 AMP FUSES IN BOTH THE HOT AND NEUTRAL CONDUCTORS.
7. ALL WIRING ASSOCIATED WITH SITE LIGHTING BETWEEN POWER SOURCE AND AND HANDHOLES SHALL BE #2 AWG (MIN) WITH #8GND AND INSTALLED IN 2" CONDUIT.
8. ALL WIRING ASSOCIATED WITH SITE LIGHTING BETWEEN THE HANDHOLE AND LIGHTING FIXTURE SHALL BE 2#10+1#10G, 3/4"C
9. ALL LIGHTING FIXTURES SHALL BE PROPERLY GROUNDED AS PER MANUFACTURERS RECOMMENDATIONS. AND AS REQUIRED BY THE NATIONAL ELECTRICAL CODE.
10. ELECTRICAL CONTRACTOR SHALL CONFIRM ROUTING OF ALL INGROUND CONDUITS WITH CIVIL ENGINEER.
11. ELECTRICAL CONTRACTOR SHALL CONFIRM PARKING LOT POLE BASE MOUNTING HEIGHTS WITH CIVIL ENGINEER.
12. ELECTRICAL CONTRACTOR SHALL FURNISH AND INSTALL ALL GROUNDING FOR ALL ELECTRICAL DEVICES AS PER MANUFACTURERS RECOMMENDATIONS.
13. ALL RACEWAY BURIED IN EARTH SHALL BE DIRECT BURIAL, USING RACEWAY SPACERS. ALL RACEWAY CROSSING UNDER ROADWAYS SHALL BE ENCASED IN CONCRETE, USING RACEWAY SPACERS. CONFIRM ROUTING WITH SITE/CIVIL ENGINEER.
14. PROVIDE BURNDY LUG REDUCERS ON ALL OVERSIZED CONDUCTORS TO COMPENSATE FOR VOLTAGE DROP.
15. PROVIDE HANDHOLES AS NOTED AND/OR PER SITE CONDITIONS.

1 Electrical Site Lighting Plan

Scale: 1" = 20'-0"

WB&A
Wozny/Barbar & Associates, Inc.
CONSULTING ENGINEERS
1076 Washington Street
Hanover, MA 02339
Tel: (781) 826-4144
Fax: (781) 924-5792
www.wbaengineers.com
161 Exchange Street
3rd Floor
Pawtucket, RI 02860

Date issued:

07.15.19

WINSLOW ARCHITECTS INC

89 MASSACHUSETTS AVE.
ARLINGTON, MA 02474

P: 781 648.6600
F: 781 648.6601

www.winslowarchitects.com

Owner/Developer:

MEDFIELD GREEN LLC.

Project:

MEDFIELD GREEN

Drawing:

Electrical Site Lighting Plan

Revisions:

No.	Description	Date

Stamp:

ANY REPRODUCTION, POSSESSION OR USE OF THIS DRAWING WITHOUT THE WRITTEN PERMISSION OF WINSLOW ARCHITECTS INC. IS PROHIBITED. VIOLATORS WILL BE PROSECUTED TO THE FULL EXTENT OF THE LAW.

© 2019 WINSLOW ARCHITECTS, INC.

Project number:

16-515

Sheet:

E-003

7/16/2019 4:12 PM

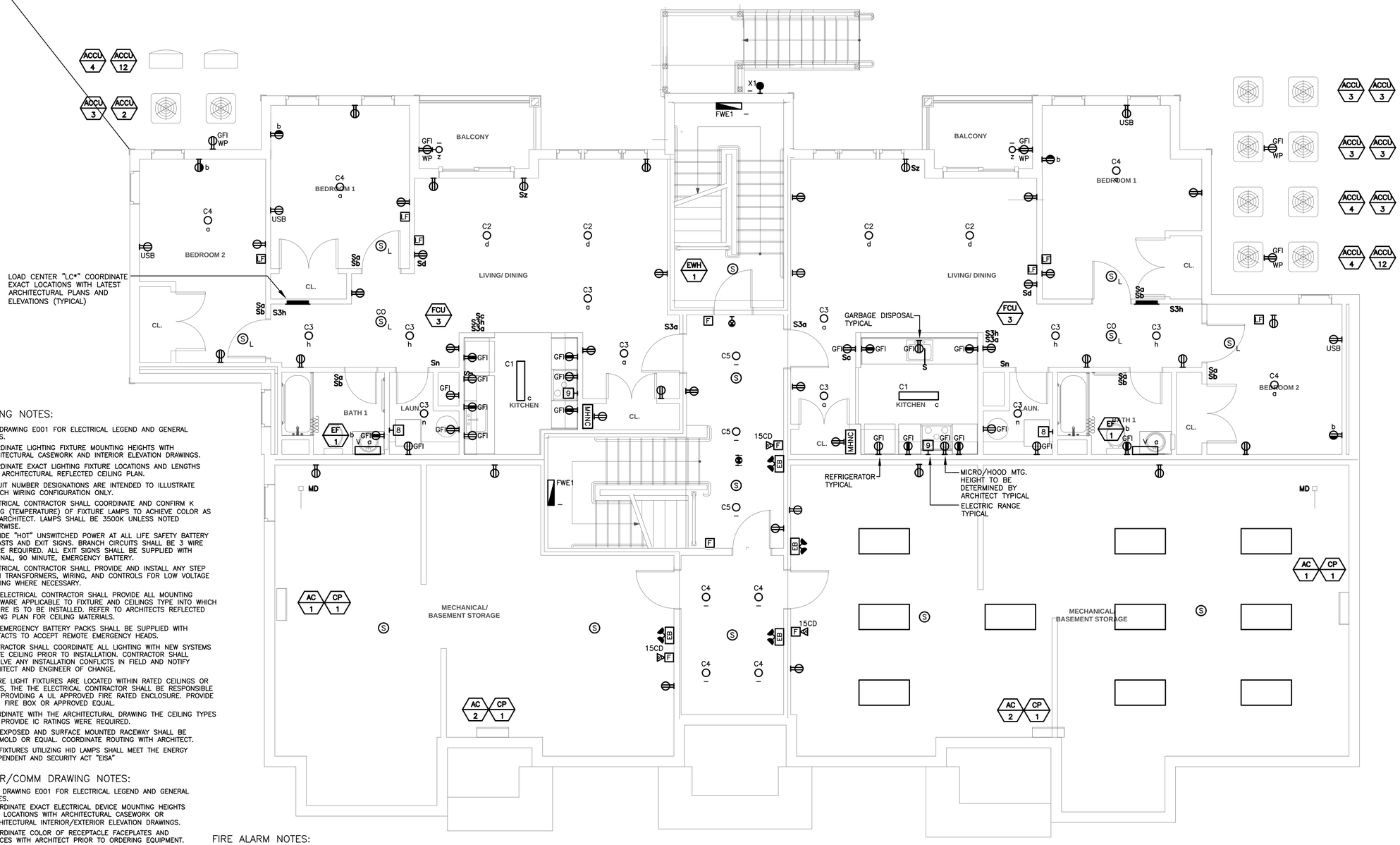

LIGHTING NOTES:

1. SEE DRAWING E001 FOR ELECTRICAL LEGEND AND GENERAL NOTES.
2. COORDINATE LIGHTING FIXTURE MOUNTING HEIGHTS WITH ARCHITECTURAL CASEWORK AND INTERIOR ELEVATION DRAWINGS.
3. COORDINATE EXACT LIGHTING FIXTURE LOCATIONS AND LENGTHS WITH ARCHITECTURAL REFLECTED CEILING PLAN.
4. CIRCUIT NUMBER DESIGNATIONS ARE INTENDED TO ILLUSTRATE BRANCH WIRING CONFIGURATION ONLY.
5. ELECTRICAL CONTRACTOR SHALL COORDINATE AND CONFIRM K RATING (TEMPERATURE) OF FIXTURE LAMPS TO ACHIEVE COLOR AS PER ARCHITECT. LAMPS SHALL BE 3500K UNLESS NOTED OTHERWISE.
6. PROVIDE "HOT" UNSWITCHED POWER AT ALL LIFE SAFETY BATTERY BALLASTS AND EXIT SIGNS. BRANCH CIRCUITS SHALL BE 3 WIRE WHERE REQUIRED. ALL EXIT SIGNS SHALL BE SUPPLIED WITH INTERNAL, 90 MINUTE, EMERGENCY BATTERY.
7. ELECTRICAL CONTRACTOR SHALL PROVIDE AND INSTALL ANY STEP DOWN TRANSFORMERS, WIRING, AND CONTROLS FOR LOW VOLTAGE LIGHTING WHERE NECESSARY.
8. THE ELECTRICAL CONTRACTOR SHALL PROVIDE ALL MOUNTING HARDWARE APPLICABLE TO FIXTURE AND CEILINGS TYPE INTO WHICH FIXTURE IS TO BE INSTALLED. REFER TO ARCHITECTS REFLECTED CEILING PLAN FOR CEILING MATERIALS.
9. ALL EMERGENCY BATTERY PACKS SHALL BE SUPPLIED WITH CONTACTS TO ACCEPT REMOTE EMERGENCY HEADS.
10. CONTRACTOR SHALL COORDINATE ALL LIGHTING WITH NEW SYSTEMS ABOVE CEILING PRIOR TO INSTALLATION. CONTRACTOR SHALL RESOLVE ANY INSTALLATION CONFLICTS IN FIELD AND NOTIFY ARCHITECT AND ENGINEER OF CHANGE.
11. WHERE LIGHT FIXTURES ARE LOCATED WITHIN RATED CEILINGS OR WALLS, THE THE ELECTRICAL CONTRACTOR SHALL BE RESPONSIBLE FOR PROVIDING A UL APPROVED FIRE RATED ENCLOSURE. PROVIDE ELCO FIRE BOX OR APPROVED EQUAL.
12. COORDINATE WITH THE ARCHITECTURAL DRAWING THE CEILING TYPES AND PROVIDE IC RATINGS WERE REQUIRED.
13. ALL EXPOSED AND SURFACE MOUNTED RACEWAY SHALL BE WIREMOLD OR EQUAL. COORDINATE ROUTING WITH ARCHITECT.
14. ALL FIXTURES UTILIZING HID LAMPS SHALL MEET THE ENERGY INDEPENDENT AND SECURITY ACT "EISA"

POWER/COMM DRAWING NOTES:

1. SEE DRAWING E001 FOR ELECTRICAL LEGEND AND GENERAL NOTES.
2. COORDINATE EXACT ELECTRICAL DEVICE MOUNTING HEIGHTS AND LOCATIONS WITH ARCHITECTURAL CASEWORK OR ARCHITECTURAL INTERIOR/EXTERIOR ELEVATION DRAWINGS.
3. COORDINATE COLOR OF RECEPTACLE FACEPLATES AND DEVICES WITH ARCHITECT PRIOR TO ORDERING EQUIPMENT.
4. ALL NEW EQUIPMENT SHALL MATCH BASE BUILDING STANDARDS AND SPECIFICATIONS, UNLESS NOTED OTHERWISE.
5. CIRCUIT NUMBER DESIGNATIONS ARE INTENDED TO ILLUSTRATE BRANCH WIRING CONFIGURATION ONLY.
6. DEVICES SHALL BE COORDINATED WITH THE DEPTH OF NEW PARTITIONS.
7. ALL POWER/DATA OUTLET FACEPLATES SHALL BE LABELED WITH CIRCUIT NUMBER FEEDING OUTLET AND PANEL DESIGNATION. LABEL STYLE AND SIZE SHALL MATCH BASE BUILDING STANDARDS. CONTRACTOR SHALL COORDINATE COLOR, SIZE AND METHOD OF LABELING WITH ARCHITECT.
8. ALL EXPOSED AND SURFACE MOUNTED CONDUIT SHALL BE GALVANIZED RIGID STEEL.
9. WHERE EQUIPMENT IS RATED 800 AMPS OR MORE THE DOOR SHALL OPEN IN DIRECTION OF EGRESS AND BE EQUIPPED WITH PANIC BARS, PRESSURE PLATES, OR OTHER DEVICES THAT ARE NORMALLY LATCHED BUT OPEN UNDER SIMPLE PRESSURE. COORDINATE DOOR HARDWARE REQUIREMENTS WITH ARCHITECTURAL DOOR SCHEDULE.
10. COORDINATE WITH THE LATEST TELECOMMUNICATIONS DRAWINGS FOR ADDITIONAL ELECTRICAL REQUIREMENTS/SCOPE OF WORK

FIRE ALARM NOTES:

1. SEE DRAWING E001 FOR ELECTRICAL LEGEND AND GENERAL NOTES.
2. COORDINATE EXACT ELECTRICAL DEVICE MOUNTING HEIGHTS AND LOCATIONS WITH ARCHITECTURAL CASEWORK OR ARCHITECTURAL INTERIOR/EXTERIOR ELEVATION DRAWINGS.
3. CIRCUIT NUMBER DESIGNATIONS ARE INTENDED TO ILLUSTRATE BRANCH WIRING CONFIGURATION ONLY.
4. DEVICES SHALL BE COORDINATED WITH THE DEPTH OF NEW PARTITIONS.
5. ALL EXPOSED AND SURFACE MOUNTED CONDUIT SHALL BE GALVANIZED RIGID STEEL.
6. REFER TO LOCAL FIRE PREVENTION RULES AND REGULATIONS FOR ADDITIONAL INFORMATION.
7. FIRE ALARM CABLE SHALL BE RED ARMORED CABLE.
8. FIRE ALARM DEVICES AND COMPONENTS SHALL BE WIRED BACK TO THE FIRE ALARM CONTROL PANEL. ALL FIRE ALARM STROBES TO BE SYNCHRONIZED. PROVIDE A COMPLETE TEST OF THE ENTIRE FIRE ALARM SYSTEM UPON COMPLETION OF THE INSTALLATION THE SYSTEM SHALL MEET ALL REQUIREMENTS OF THE NFPA AND LOCAL CODES. COORDINATE EXACT REQUIREMENTS WITH LOCAL FIRE DEPARTMENT PRIOR TO WORK BEING PERFORMED.

1 Basement Level Electrical Plan

Scale: 1/4" = 1'-0"

WB&A
Wozny/Barbar & Associates, Inc.
CONSULTING ENGINEERS
1076 Washington Street
Hanover, MA 02339
Tel: (781) 826-4144
Fax: (781) 924-5792
www.wbengineers.com
161 Exchange Street
3rd Floor
Pawtucket, RI 02860

Date issued:

07.15.19

WINSLOW ARCHITECTS INC
89 MASSACHUSETTS AVE.
ARLINGTON, MA 02474
P: 781 648.6600
F: 781 648.6601
www.winslowarchitects.com

Owner/Developer:

MEDFIELD GREEN LLC.

Project:

MEDFIELD GREEN

Drawing:

Building A Electrical Basement Plan

Revisions:

No.	Description	Date

Stamp:

ANY REPRODUCTION, POSSESSION OR USE OF THIS DRAWING WITHOUT THE WRITTEN PERMISSION OF WINSLOW ARCHITECTS INC. IS PROHIBITED. VIOLATORS WILL BE PROSECUTED TO THE FULL EXTENT OF THE LAW.
© 2019 WINSLOW ARCHITECTS, INC.

Project number:

16-515

Sheet:

E-A-100

7/16/2019 4:12 PM

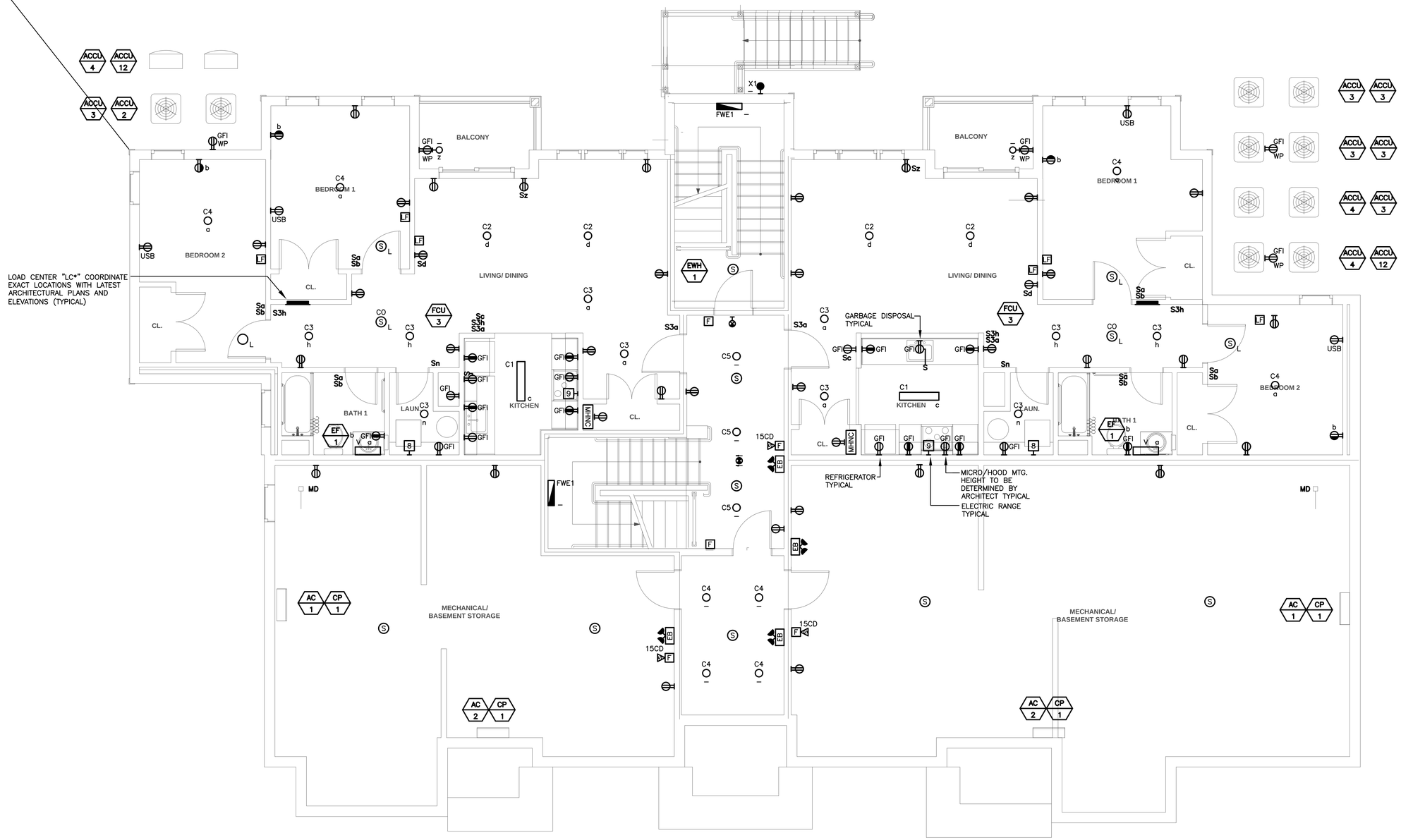

1 Basement Level Electrical Plan

Scale: 1/4" = 1'-0"

ELECTRICAL NOTES:

1. SEE DRAWING E100 FOR TYPICAL LIGHTING, POWER AND FIRE ALARM NOTES.
2. SEE DRAWING E001 FOR TYPICAL RESIDENTIAL UNIT NOTES.

WB&A
Wozny/Barbar & Associates, Inc.
CONSULTING ENGINEERS
1076 Washington Street
Hanover, MA 02339
Tel: (781) 826-4144
Fax: (781) 924-5792
www.wbaengineers.com
161 Exchange Street
3rd Floor
Pawtucket, RI 02860

Date issued:

07.15.19

WINSLOW ARCHITECTS INC
89 MASSACHUSETTS AVE.
ARLINGTON, MA 02474
P: 781 648.6600
F: 781 648.6601
www.winslowarchitects.com

Owner/Developer:

MEDFIELD GREEN LLC.

Project:

MEDFIELD GREEN

Drawing:

Building B Electrical Basement Plan

Revisions:

No.	Description	Date

Stamp:

ANY REPRODUCTION, POSSESSION OR USE OF THIS DOCUMENT WITHOUT THE WRITTEN PERMISSION OF WINSLOW ARCHITECTS, INC. IS PROHIBITED. VIOLATORS WILL BE PROSECUTED TO THE FULL EXTENT OF THE LAW.

© 2019 WINSLOW ARCHITECTS, INC.

Project number:

16-515

Sheet:

E-B-100

7/16/2019 4:12 PM

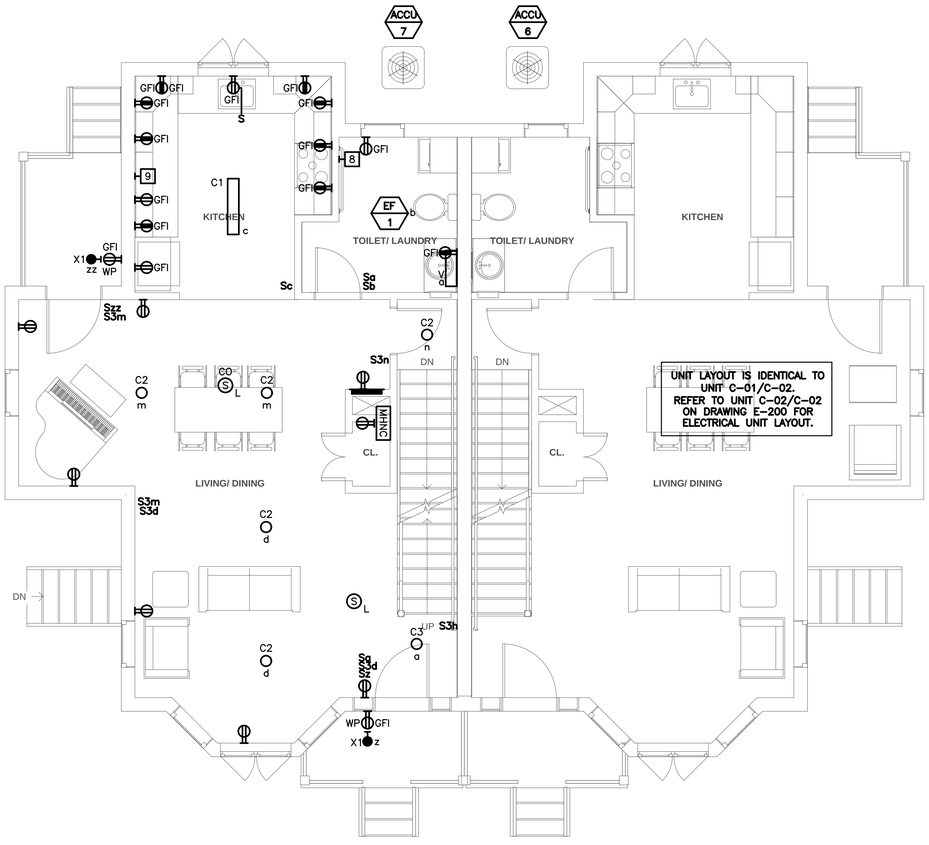

1 First Floor Electrical Plan

Scale: 1/4" = 1'-0"

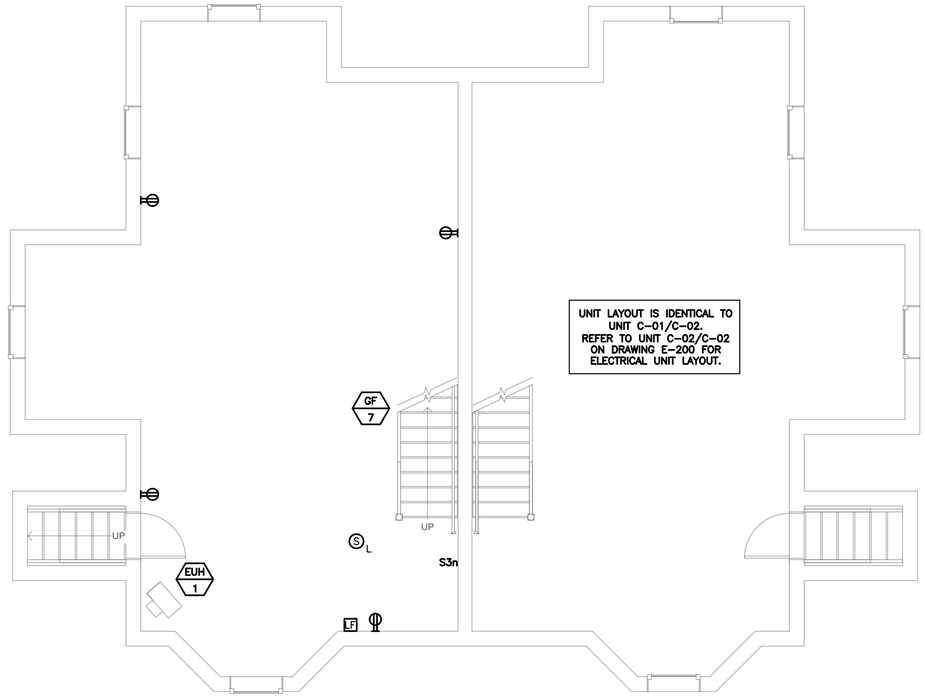

2 Basement Level Electrical Plan

Scale: 1/4" = 1'-0"

ELECTRICAL NOTES:

1. SEE DRAWING E100 FOR TYPICAL LIGHTING, POWER AND FIRE ALARM NOTES.
2. SEE DRAWING E001 FOR TYPICAL RESIDENTIAL UNIT NOTES.

WB&A
Wozny/Barbar & Associates, Inc.
CONSULTING ENGINEERS
1076 Washington Street
Hanover, MA 02339
Tel: (781) 826-4144
Fax: (781) 924-5792
www.wbaengineers.com
161 Exchange Street
3rd Floor
Pawtucket, RI 02860

Date issued:

07.15.19

WINSLOW ARCHITECTS INC

89 MASSACHUSETTS AVE.
ARLINGTON, MA 02474

P: 781 648.6600
F: 781 648.6601

www.winslowarchitects.com

Owner/Developer:

MEDFIELD GREEN LLC.

Project:

MEDFIELD GREEN

Drawing:

Building C Electrical Basement & First Floor Plan

Revisions:

No.	Description	Date

Stamp:

ANY REPRODUCTION, POSSESSION OR USE OF THIS DRAWING WITHOUT THE WRITTEN PERMISSION OF WINSLOW ARCHITECTS INC. IS PROHIBITED. VIOLATORS WILL BE PROSECUTED TO THE FULL EXTENT OF THE LAW.

© 2019 WINSLOW ARCHITECTS, INC.

Project number:

16-515

Sheet:

E-C-100

7/16/2019 4:12 PM

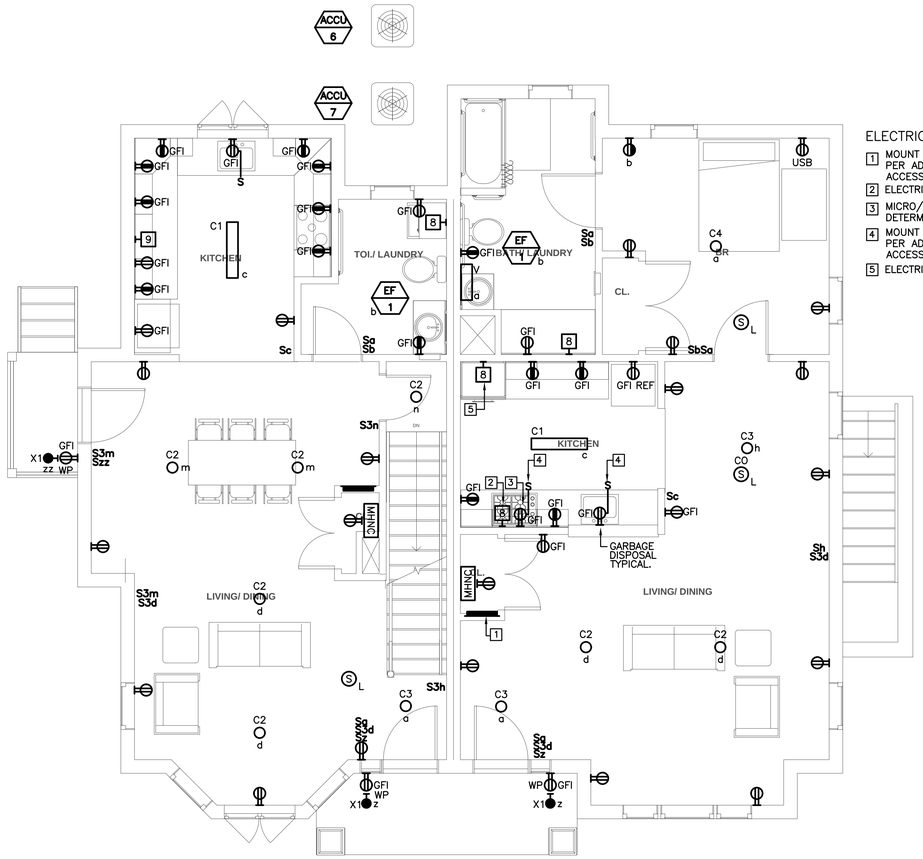

ELECTRICAL KEYED NOTES:

1. MOUNT LOAD CENTER "LC*" AT 48" A.F.F PER ADA REQUIREMENTS TYPICAL FOR ALL ACCESSIBLE UNITS
2. ELECTRIC COOKTOP TYPICAL.
3. MICRO/HOOD MTG. HEIGHT TO BE DETERMINED BY ARCHITECT
4. MOUNT SWITCHES ON APRON OF CABINETRY PER ADA REQUIREMENTS TYPICAL FOR ALL ACCESSIBLE UNITS
5. ELECTRIC WALL OVEN.

1 First Floor Electrical Plan (Accessible)

Scale: 1/4" = 1'-0"

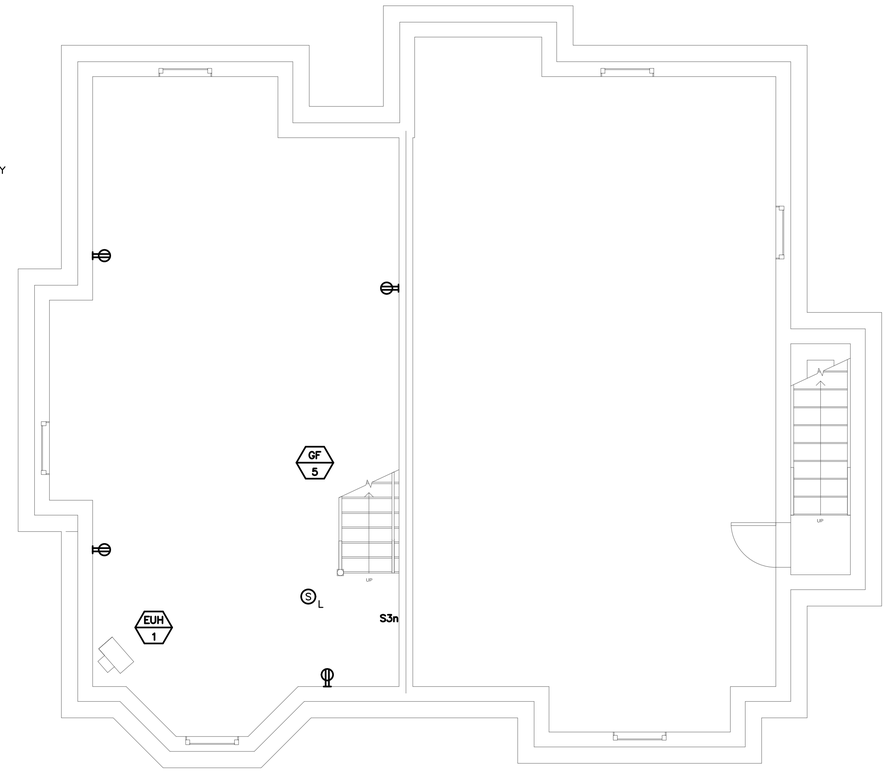

2 Basement Level Electrical Plan

Scale: 1/4" = 1'-0"

ELECTRICAL NOTES:

1. SEE DRAWING E100 FOR TYPICAL LIGHTING, POWER AND FIRE ALARM NOTES.
2. SEE DRAWING E001 FOR TYPICAL RESIDENTIAL UNIT NOTES.

WB&A
Wozny/Barbar & Associates, Inc.
CONSULTING ENGINEERS
1076 Washington Street
Hanover, MA 02339
Tel: (781) 826-4144
Fax: (781) 924-5792
www.wbaengineers.com
161 Exchange Street
3rd Floor
Pawtucket, RI 02860

Date issued:

07.15.19

WINSLOW ARCHITECTS INC

89 MASSACHUSETTS AVE.
ARLINGTON, MA 02474

P: 781 648.6600
F: 781 648.6601

www.winslowarchitects.com

Owner/Developer:

MEDFIELD GREEN LLC.

Project:

MEDFIELD GREEN

Drawing:

Building D Electrical First Floor & Basement Plan

Revisions:

No.	Description	Date

Stamp:

ANY REPRODUCTION, POSSESSION OR USE OF THIS DRAWING WITHOUT THE WRITTEN PERMISSION OF WINSLOW ARCHITECTS INC. IS PROHIBITED. VIOLATORS WILL BE PROSECUTED TO THE FULL EXTENT OF THE LAW.

© 2019 WINSLOW ARCHITECTS, INC.

Project number:

16-515

Sheet:

E-D-100

7/16/2019 4:12 PM



1 Basement Level Electrical Plan

Scale: 1/4" = 1'-0"

ELECTRICAL NOTES:

1. SEE DRAWING E100 FOR TYPICAL LIGHTING, POWER AND FIRE ALARM NOTES.
2. SEE DRAWING E001 FOR TYPICAL RESIDENTIAL UNIT NOTES.

WB&A
Wozny/Barbar & Associates, Inc.
CONSULTING ENGINEERS
1076 Washington Street
Hanover, MA 02339
Tel: (781) 826-4144
Fax: (781) 924-5792
www.wbassociates.com
161 Exchange Street
3rd Floor
Pawtucket, RI 02860

Date issued:

07.15.19

WINSLOW ARCHITECTS INC

89 MASSACHUSETTS AVE.
ARLINGTON, MA 02474

P: 781 648.6600
F: 781 648.6601

www.winslowarchitects.com

Owner/Developer:

MEDFIELD GREEN LLC.

Project:

MEDFIELD GREEN

Drawing:

Building E Electrical Basement Plan

Revisions:

No.	Description	Date

Stamp:

ANY REPRODUCTION, POSSESSION OR USE OF THIS DRAWING WITHOUT THE WRITTEN PERMISSION OF WINSLOW ARCHITECTS INC. IS PROHIBITED. VIOLATORS WILL BE PROSECUTED TO THE FULL EXTENT OF THE LAW.

© 2019 WINSLOW ARCHITECTS, INC.

Project number:

16-515

Sheet:

E-E-100

7/16/2019 4:13 PM

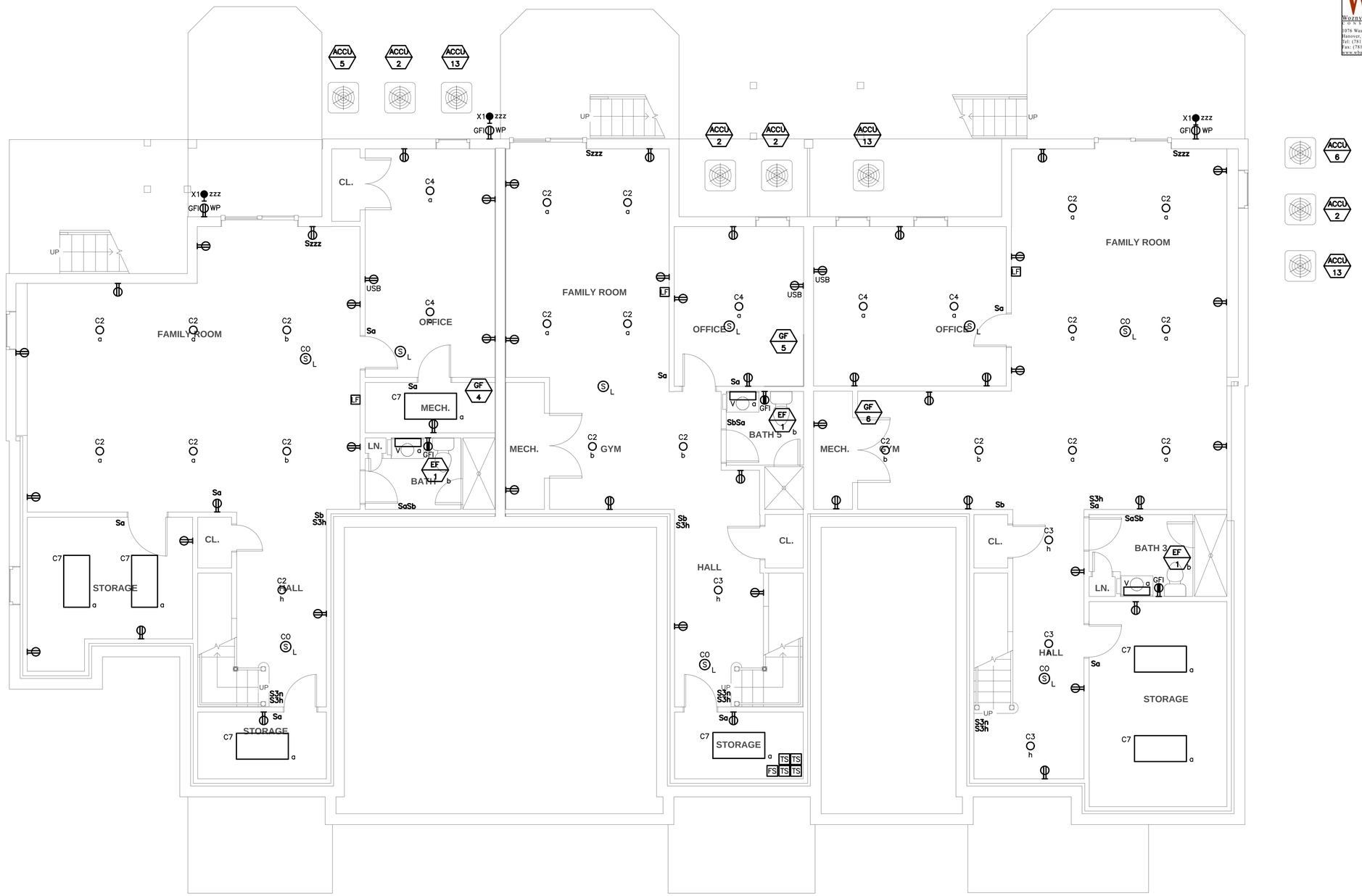

1 Basement Level Electrical Plan

Scale: 1/4" = 1'-0"

ELECTRICAL NOTES:

1. SEE DRAWING E100 FOR TYPICAL LIGHTING, POWER AND FIRE ALARM NOTES.
2. SEE DRAWING E001 FOR TYPICAL RESIDENTIAL UNIT NOTES.

WB&A
Wozny/Barbar & Associates, Inc.
CONSULTING ENGINEERS
1076 Washington Street
Hanover, MA 02339
Tel: (781) 826-4144
Fax: (781) 924-5792
www.wbengineers.com
161 Exchange Street
3rd Floor
Pawtucket, RI 02860

Date issued:

07.15.19

WINSLOW ARCHITECTS INC

89 MASSACHUSETTS AVE.
ARLINGTON, MA 02474

P: 781 648.6600
F: 781 648.6601

www.winslowarchitects.com

Owner/Developer:

MEDFIELD GREEN LLC.

Project:

MEDFIELD GREEN

Drawing:

Building F Electrical Basement Plan

Revisions:

No.	Description	Date

Stamp:

ANY REPRODUCTION, POSSESSION OR USE OF THIS DRAWING WITHOUT THE WRITTEN PERMISSION OF WINSLOW ARCHITECTS INC. IS PROHIBITED. VIOLATORS WILL BE PROSECUTED TO THE FULL EXTENT OF THE LAW.

© 2019 WINSLOW ARCHITECTS, INC.

Project number:

16-515

Sheet:

E-F-100

7/16/2019 4:13 PM

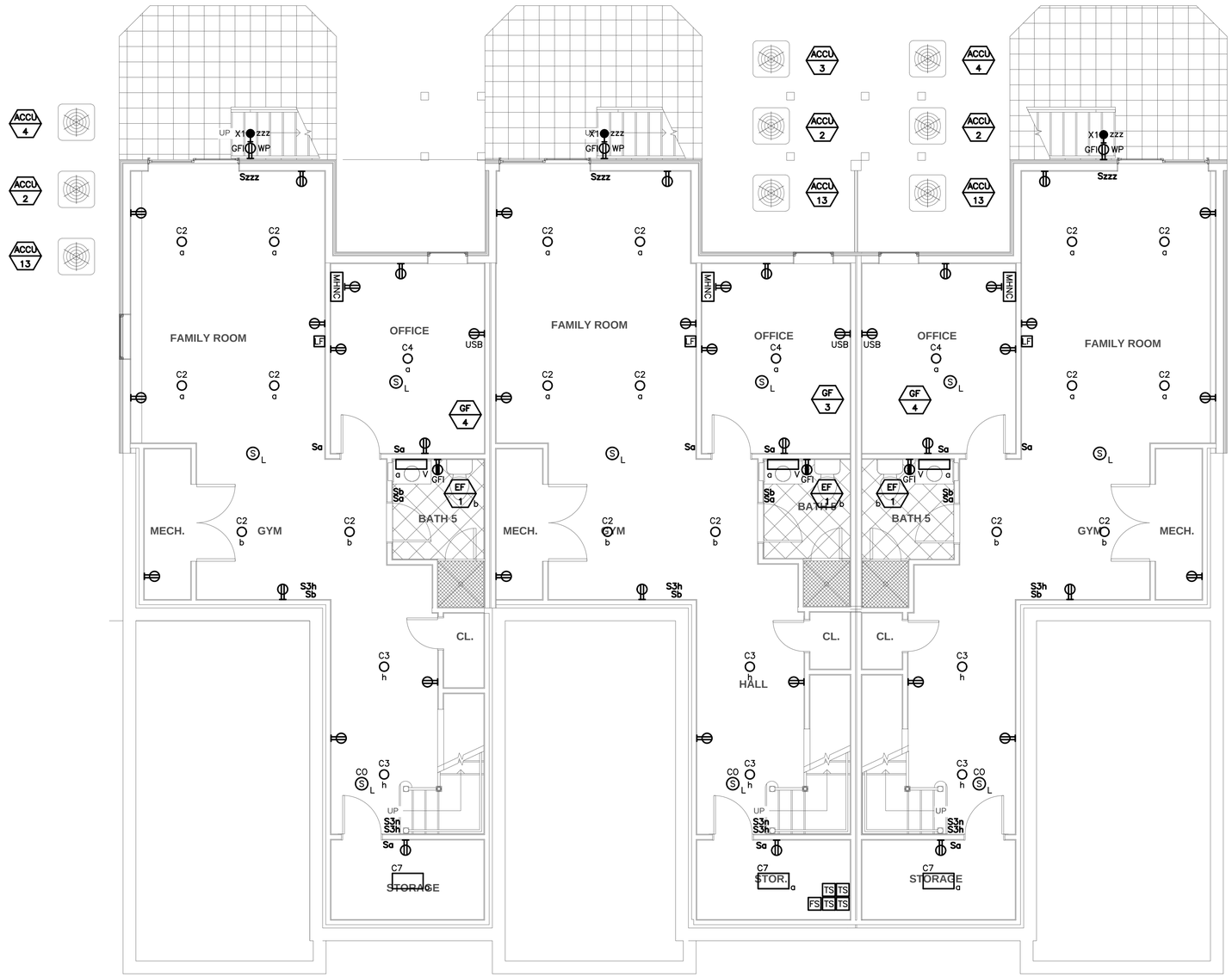

1 Basement Level Electrical Plan

Scale: 1/4" = 1'-0"

ELECTRICAL NOTES:

1. SEE DRAWING E100 FOR TYPICAL LIGHTING, POWER AND FIRE ALARM NOTES.
2. SEE DRAWING E001 FOR TYPICAL RESIDENTIAL UNIT NOTES.

WB&A
Wozny/Barbar & Associates, Inc.
CONSULTING ENGINEERS
1076 Washington Street
Hanover, MA 02339
Tel: (781) 826-4144
Fax: (781) 924-5792
www.wbaengineers.com
161 Exchange Street
3rd Floor
Pawtucket, RI 02860

Date issued:

07.15.19

WINSLOW ARCHITECTS INC
89 MASSACHUSETTS AVE.
ARLINGTON, MA 02474
P: 781 648.6600
F: 781 648.6601
www.winslowarchitects.com

Owner/Developer:

MEDFIELD GREEN LLC.

Project:

MEDFIELD GREEN

Drawing:

Building G Electrical Basement Plan

Revisions:

No.	Description	Date

Stamp:

ANY REPRODUCTION, POSSESSION OR USE OF THIS DRAWING WITHOUT THE WRITTEN PERMISSION OF WINSLOW ARCHITECTS INC. IS PROHIBITED. VIOLATORS WILL BE PROSECUTED TO THE FULL EXTENT OF THE LAW.

© 2019 WINSLOW ARCHITECTS, INC.

Project number:

16-515

Sheet:

E-G-100

7/16/2019 4:13 PM

WB&A
Wozny/Barbar & Associates, Inc.
CONSULTING ENGINEERS
1076 Washington Street
Hanover, MA 02339
Tel: (781) 826-4144
Fax: (781) 924-5792
www.wbaengineers.com
161 Exchange Street
3rd Floor
Pawtucket, RI 02860

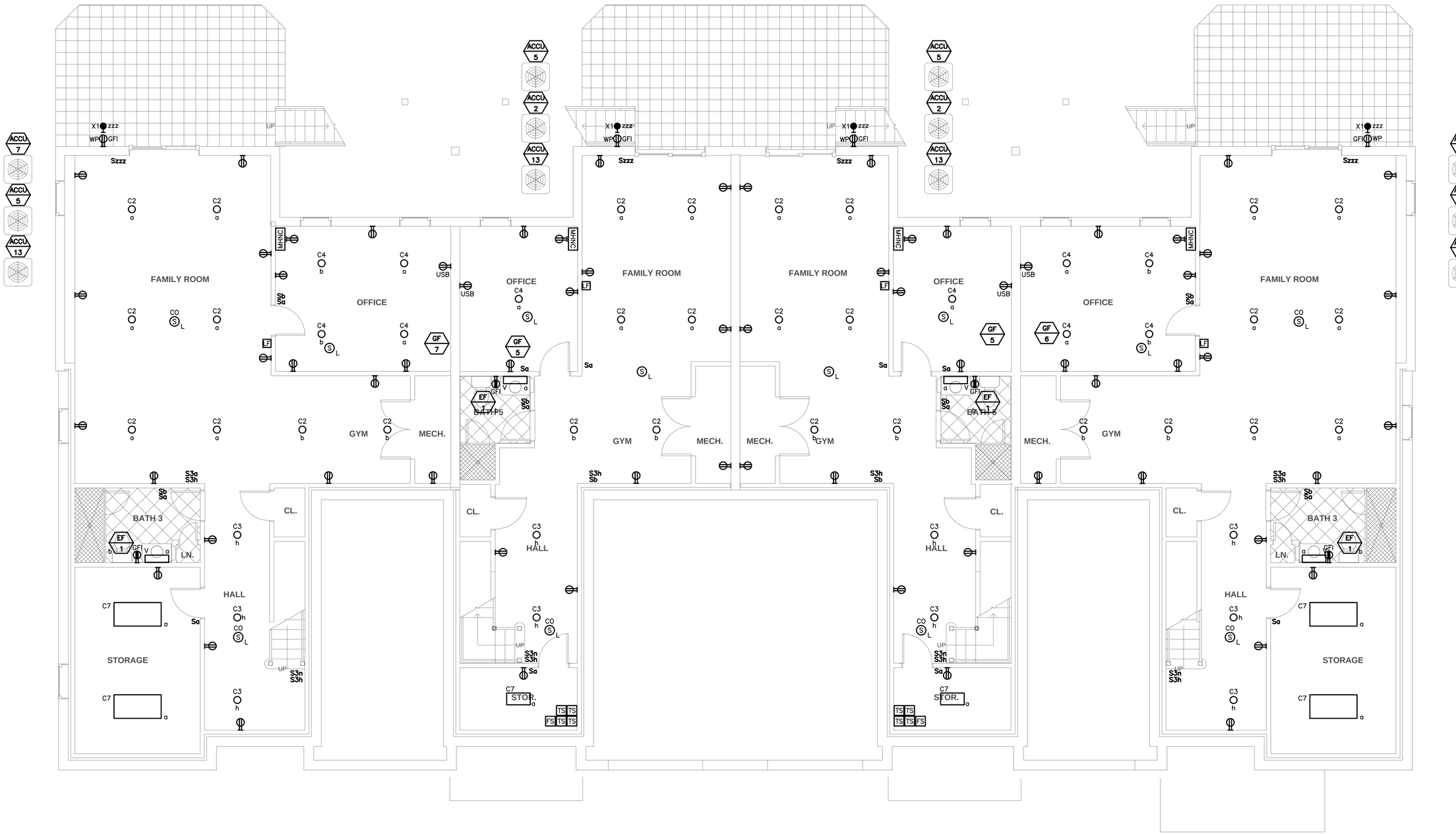

1 Basement Level Electrical Plan

Scale: 1/4" = 1'-0"

ELECTRICAL NOTES:

1. SEE DRAWING E100 FOR TYPICAL LIGHTING, POWER AND FIRE ALARM NOTES.
2. SEE DRAWING E001 FOR TYPICAL RESIDENTIAL UNIT NOTES.

Date issued:

07.15.19

WINSLOW ARCHITECTS INC

89 MASSACHUSETTS AVE.
ARLINGTON, MA 02474

P: 781 648.6600
F: 781 648.6601

www.winslowarchitects.com

Owner/Developer:

MEDFIELD GREEN LLC.

Project:

MEDFIELD GREEN

Drawing:

Building H Electrical Basement Plan

Revisions:

No.	Description	Date

Stamp:

ANY REPRODUCTION, POSSESSION OR USE OF THIS DRAWING WITHOUT THE WRITTEN PERMISSION OF WINSLOW ARCHITECTS INC. IS PROHIBITED. VIOLATORS WILL BE PROSECUTED TO THE FULL EXTENT OF THE LAW.

© 2019 WINSLOW ARCHITECTS, INC.

Project number:

16-515

Sheet:

E-H-100

7/16/2019 4:13 PM

LEGEND OF 3–PHASE FEEDER SIZES – ALUMINUM CONDUCTORS

TAG	CONDUCTORS (3 PHASE, 3 WIRE) WITH GROUND	RACEWAY SIZE	TAG	CONDUCTORS (3 PHASE, 4 WIRE) WITH GROUND	RACEWAY SIZE	NOMINAL AMPACITY RATING
60–3G	3#2 AWG & 1#8 AWG GND.	1 1/4 "	60–4G	4#4 AWG & 1#8 AWG GND.	1 1/4 "	60
100–3G	3#1/0 AWG & 1#6 AWG GND.	1 1/2 "	100–4G	4#1 AWG & 1#6 AWG GND.	1 1/2 "	100
125–3G	3#2/0 AWG & 1#4 AWG GND.	2"	125–4G	4#1/0 AWG & 1#4 AWG GND.	2"	125
150–3G	3#3/0 AWG & 1#4 AWG GND.	2"	150–4G	4#3/0 AWG & 1#4 AWG GND.	2"	150
175–3G	3#4/0 AWG & 1#4 AWG GND.	2"	175–4G	4#4/0 AWG & 1#4 AWG GND.	2 1/2 "	175
200–3G	3–250 KCMIL & 1#4 AWG GND.	2 1/2 "	200–4G	4–250 KCMIL & 1#4 AWG GND.	2 1/2 "	200
225–3G	3–300 KCMIL & 1#2 AWG GND.	3"	225–4G	4–300 KCMIL & 1#2 AWG GND.	3"	225
250–3G	3–350 KCMIL & 1#2 AWG GND.	3"	250–4G	4–350 KCMIL & 1#2 AWG GND.	3"	250
300–3G	3–500 KCMIL & 1#2 AWG GND.	3"	300–4G	4–500 KCMIL & 1#2 AWG GND.	4"	300
350–3G	3–600 KCMIL & 1#1 AWG GND.	4"	350–4G	4–600 KCMIL & 1#1 GND.	4"	350
400–3G	3–750 KCMIL & 1#1 AWG GND.	4"	400–4G	4–750 KCMIL & 1#1 AWG GND.	4"	400
600–3G	6–500 KCMIL & 2#2/0 AWG GND.	2–3"	600–4G	8–500 KCMIL & 2#2/0 AWG GND.	2–4"	600
700–3G	6–600 KCMIL & 2#3/0 AWG GND.	2–4"	700–4G	8–600 KCMIL & 2#3/0 GND.	2–4"	600
800–3G	6–750 KCMIL & 2#3/0 AWG GND.	2–4"	800–4G	8–750 KCMIL & 2#3/0 AWG GND.	2–4"	800

FEEDER NOTES:

1. AMPACITIES BASED ON SOUTHWIRE SIMPULL THHN ALUMAFLEX COMPACT STRANDED CONSTRUCTION. FEEDERS FOR AMPACITES≤BELOW 60 AMPS SHALL BE COPPER.

TYPICAL LOAD CENTER SCHEDULE

PANEL: LC* WIRES: 3 MOUNTING: R TOTAL POLES: 30

PHASE: 1 VOLT: 120/240 AIC: 10K MAINS: 125 MCB

	DESCRIPTION OF LOAD	LOAD (KVA) A	LOAD (KVA) B	BREAKER TRIP	BREAKER POLE	BREAKER POLE	BREAKER TRIP	LOAD (KVA) A	LOAD (KVA) B	DESCRIPTION OF LOAD	
1	REFRIGERATOR			20	1	1	20			LIGHTING	2
3	SMALL APPLIANCE CIRCUIT			20	1	1	20			RECEPTACLES LIVING RM	4
5	SMALL APPLIANCE CIRCUIT			20	1	1	20			RECEPTACLES BED ROOM	6
7	HOOD			20	1	1	20			WASHER	8
9	RANGE RECEPTACLE			20	1	/	30			DRYER	10
11	DISHWASHER			20	1	2	/			/	12
13	GARBAGE DISPOSAL			20	1	1	15			LIGHTING	14
15	BATHROOM GFI			20	1	1	15			LIGHTING	16
17	BATHROOM LTG/EF–1			20	1	1	20			SPARE	18
19	BATHROOM GFI			20	1	1	20			SPARE	20
21	BATHROOM LTG/EF–1			20	1	1	20			SPARE	22
23	RANGE			50	/	1	20			SPARE	24
25	*			/	2						26
27											28
29											30
	SUBTOTAL CONNECTED									SUBTOTAL CONNECTED	

SUBTOTAL CONNECTED	KVA A	=
SUBTOTAL CONNECTED	KVA B	=
TOTAL CONNECTED	KVA	=

LOAD CENTER NOTES:

1. PROVIDE ARC–FAULT CIRCUIT BREAKERS FOR ALL 120 VOLT SINGLE PHASE 15 AND 20 AMPERE BRANCH CIRCUITS PER NEC 2011 ARTICLE 210.12 (B) INCLUDING BUT NOT LIMITED TO: FAMILY ROOMS, DINING ROOMS, LIVING ROOMS, PARLORS, LIBRARIES, DENS, BEDROOMS, SUN ROOMS, RECREATION ROOMS, CLOSETS, HALLWAYS, OR SIMILAR ROOMS OR AREAS.
2. ELECTRICAL CONTRACTOR SHALL PROVIDE TAMPER RESISTANT RECEPTACLES IN ALL DWELLING UNITS AS PER NEC 2011 ARTICLE 406.12
3. REFER TO FLOOR PLANS FOR BRANCH DEVICE REQUIREMENTS

SCHEDULE OF MODULAR METER CENTERS 120/240V,1PH,3W (Buildings 1 & 2)

METER CENTER	AIC	MAIN MCB	MAIN FUSE	MAIN MLO	METER SOCKETS 100A/2P	125A/2P	150A/3P	200A/3P	BRANCH BREAKERS 100A/2P	125A/2P	150A/3P	200A/3P	REMARKS
MC1/MC2	42K	600A				10		1		10		1	3R RATED ENCLOSURE

SCHEDULE OF MODULAR METER CENTERS 120/240V,1PH,3W (Building 3,4,5)

METER CENTER	AIC	MAIN MCB	MAIN FUSE	MAIN MLO	METER SOCKETS 100A/2P	125A/2P	150A/3P	200A/3P	BRANCH BREAKERS 100A/2P	125A/2P	150A/3P	200A/3P	REMARKS
MC3/MC4/MC5	42K	400A				2				2			3R RATED ENCLOSURE

SCHEDULE OF MODULAR METER CENTERS 120/240V,1PH,3W (Building 6,7)

METER CENTER	AIC	MAIN MCB	MAIN FUSE	MAIN MLO	METER SOCKETS 100A/2P	125A/2P	150A/3P	200A/3P	BRANCH BREAKERS 100A/2P	125A/2P	150A/3P	200A/3P	REMARKS
MC6/MC7	42K	400A				2				2			3R RATED ENCLOSURE

SCHEDULE OF MODULAR METER CENTERS 120/240V,1PH,3W (Building 8)

METER CENTER	AIC	MAIN MCB	MAIN FUSE	MAIN MLO	METER SOCKETS 100A/2P	125A/2P	150A/3P	200A/3P	BRANCH BREAKERS 100A/2P	125A/2P	150A/3P	200A/3P	REMARKS
MC8	42K	400A				4				4			3R RATED ENCLOSURE

PANELBOARD SCHEDULE

PANEL DESIGNATION	VOLTS	PHASE	WIRES	MAINS (MLO = MAIN LUGS ONLY) BUS SIZE	OVERCURRENT DEVICE TRIP	OVERCURRENT DEVICE FRAME	BKR POLES	BRANCH DEVICES BREAKER AMPS 15	20	25	30	35	40	50	60	90	TOTAL POLES	MOUNTING: S=SURFACE F=FLUSH	ADDITTONAL CIRCUIT BREAKERS	REMARKS
HP1	120/240	1	3	225	150	225	1P		30								42	S		3R RATED ENCLOSURE
							2P													
							3P													

TYPICAL PANELBOARD NOTES:

1. REFER TO FLOOR PLANS FOR BRANCH DEVICE REQUIREMENTS
2. PROVIDE ARC–FAULT CIRCUIT BREAKERS FOR ALL 120 VOLT SINGLE PHASE 15 AND 20 AMPERE BRANCH CIRCUITS PER NEC 2014 ARTICLE 210.12 (B) INCLUDING BUT NOT LIMITED TO: FAMILY ROOMS, DINING ROOMS, LIVING ROOMS, PARLORS, LIBRARIES, DENS, BEDROOMS, SUN ROOMS, RECREATION ROOMS, CLOSETS, HALLWAYS, OR SIMILAR ROOMS OR AREAS PER NEC 2014 ARTICLE 406.12 TYPICAL FOR ALL UNITS
3. ELECTRICAL CONTRACTOR SHALL PROVIDE TAMPER RESISTANT RECEPTACLES IN ALL DWELLING UNITS AS PER NEC 2014 ARTICLE 406.12 TYPICAL FOR ALL UNITS
4. KAIC RATING SHOW ON SCHEDULES ARE MINIMUM RATINGS. AFTER SHORT CIRCUIT STUDY HAS BEEN PERFORMED THE KAIC RAITING WILL CHANGE TO MATCH THE STUDY AT NO ADDITIONAL COST TO THE PROJECT.

LOAD CENTER SER FEEDER SCHEDULE (ALUMINUM)

EACH 125A. LOAD CENTER WILL BE FED FROM THE MODULAR METER CENTER. THE FEEDER IS TO BE A TYPE SER CABLE WITH ALUMINUM CONDUCTORS. CABLE LENGTHS ARE TO BE MEASURED FROM MODULAR METER CENTER LOAD SIDE TERMINALS TO LOAD CENTER LINE TERMINALS. BENDING RADIUS OF SER CABLE SHALL BE MAINTAINED PER NEC AND MANUFACTURERS REQUIREMENTS. SER CABLES SHALL BE INSTALLED AND PROTECTED PER NEC ARTICLE 334.

CABLE LENGTHS AND ASSOCIATED SIZES:
0' – 150' 3/C#1/0&1#2 BARE GROUND SER CABLE
151'– 200' 3/C#2/0&1#1 BARE GROUND SER CABLE
201'– 250' 3/C#3/0&1#1/0 BARE GROUND SER CABLE

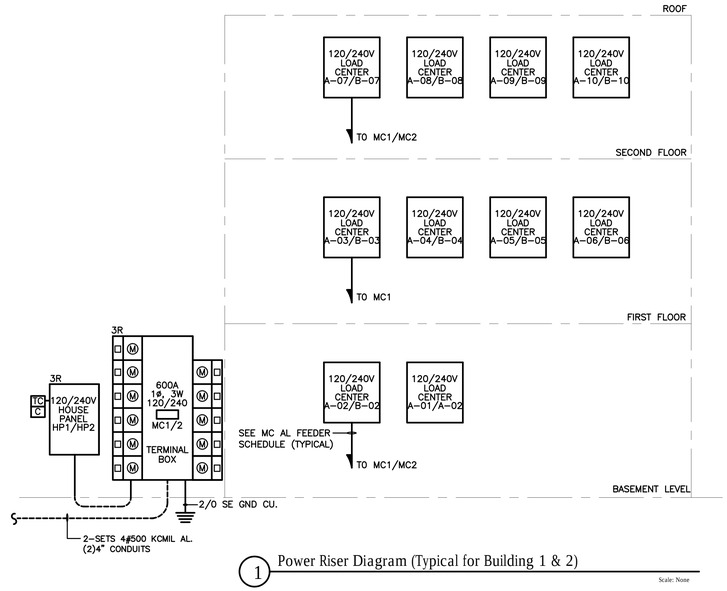

1 Power Riser Diagram (Typical for Building 1 & 2)

Scale: None

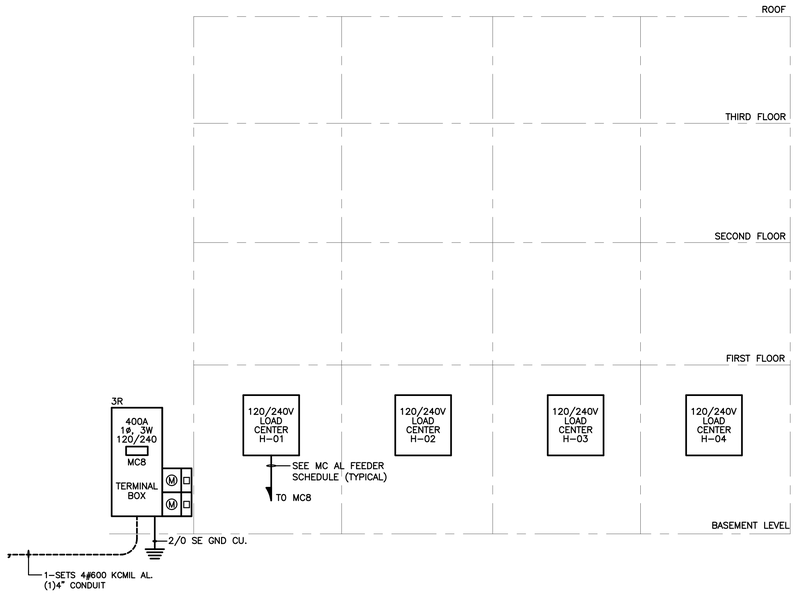

4 Power Riser Diagram Building 8

Scale: None

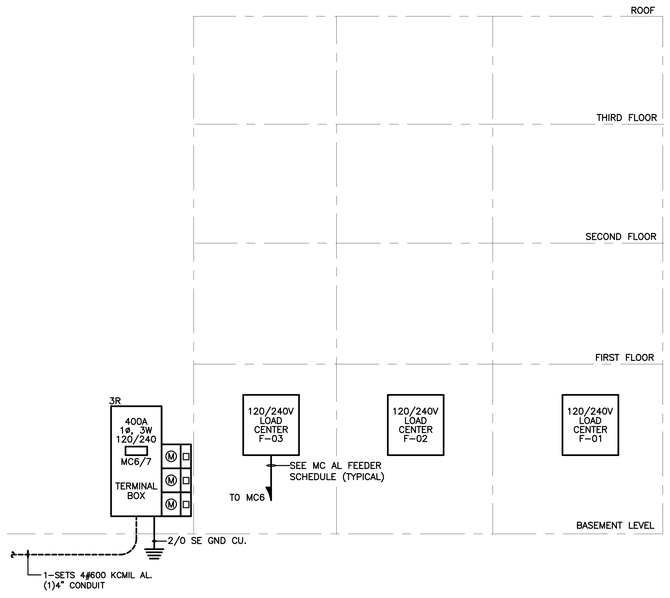

3 Power Riser Diagram (Typical for Buildings 6,7)

Scale: None

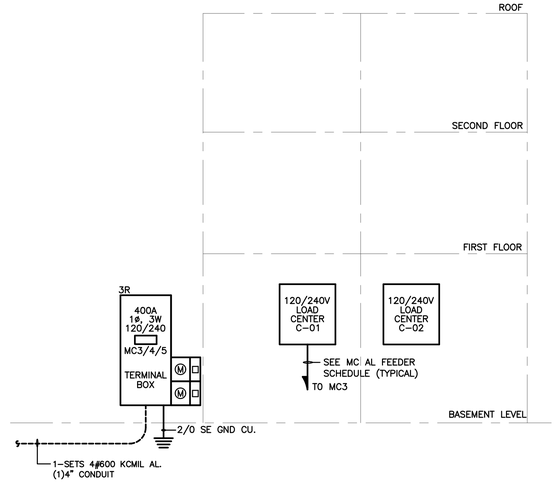

2 Power Riser Diagram (Typical for Buildings 3,4,5)

Scale: None

WB&A
Worny/Barbar & Associates, Inc.
CONSULTING ENGINEERS
1076 Washington Street Hanover, MA 02339 Tel: (781) 826-4144 Fax: (781) 924-5792 www.wbaengineers.com
161 Exchange Street 3rd Floor Pawtucket, RI 02860

Date issued:

07.15.19

WINSLOW ARCHITECTS INC

89 MASSACHUSETTS AVE.
ARLINGTON, MA 02474

P: 781 648.6600
F: 781 648.6601

www.winslowarchitects.com

Owner/Developer:

MEDFIELD GREEN LLC.

Project:

MEDFIELD GREEN

Drawing:

Electrical Power Riser Diagram Buildings 1,2,3 &4

Revisions:

No.	Description	Date

Stamp:

ANY REPRODUCTION, POSSESSION OR USE OF THIS DRAWING WITHOUT THE WRITTEN PERMISSION OF WINSLOW ARCHITECTS INC. IS PROHIBITED. VIOLATORS WILL BE PROSECUTED TO THE FULL EXTENT OF THE LAW.

© 2019 WINSLOW ARCHITECTS, INC.

Project number:

16-515

Sheet:

E-201

7/16/2019 4:13 PM

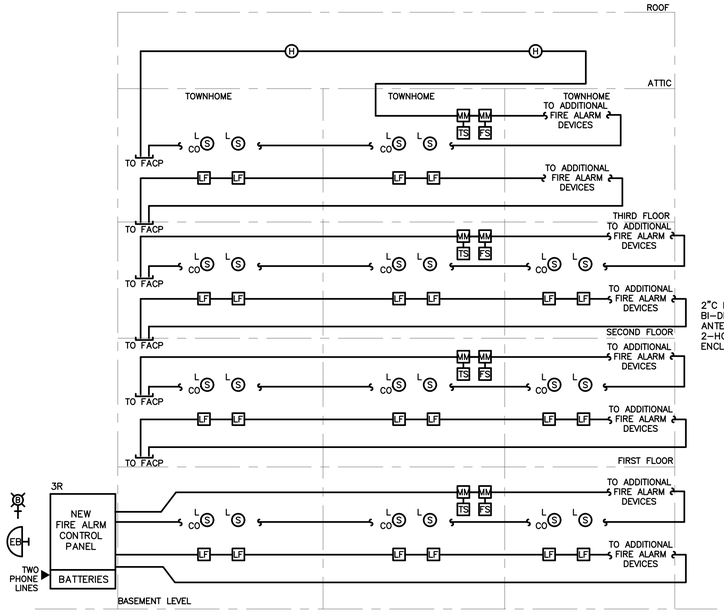

1 Fire Alarm Riser Diagram (Typical for Building 6,7,8)

Scale: None

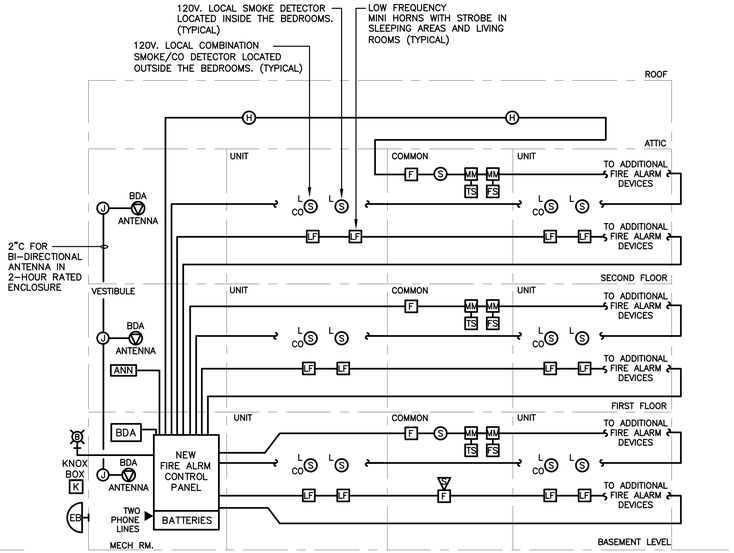

2 Fire Alarm Riser Diagram (Typical for Building 1 & 2)

Scale: None

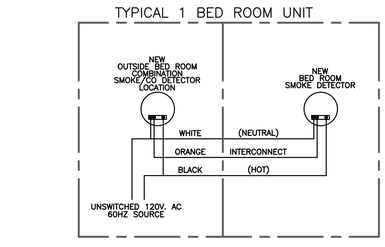

3 Units Multiple Station Smoke Detector

Scale: NTS

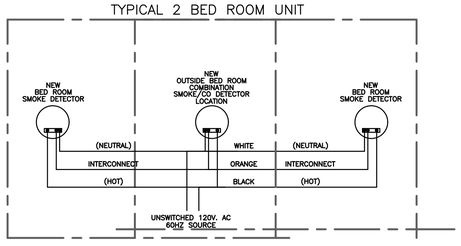

4 Units Multiple Station Smoke Detector

Scale: NTS

FIRE ALARM NOTES

1. REFER TO FLOOR PLAN FOR EXACT LOCATIONS AND QUANTITIES OF ALL DEVICES. REFER TO DRAWING E0.00 FOR SYMBOLS, LEGENDS AND SCHEDULES
2. REFER TO SECTION 28000 OF THE SPECIFICATION FOR ADDITIONAL FIRE ALARM SYSTEM REQUIREMENTS.
3. ALL FIRE ALARM SYSTEM RACEWAY SIZES AND CIRCUITRY REQUIREMENTS SHALL BE IN ACCORDANCE WITH EQUIPMENT MANUFACTURERS RECOMMENDATIONS AND ALL CODES THAT MAY APPLY.
4. CABLING MUST BE UNIQUELY IDENTIFIED AND LABELED, AND A PERMANENT ACCURATE RECORD OF THE IDENTIFICATION AND USE OF EACH CABLE MUST BE MADE AT THE TIME OF INSTALLATION. LABELING IS TO BE DONE WITH PERMANENT MARKERS ON CLEAR MYLAR TAPE. THE TAPE SHALL BE LONG ENOUGH SO WHEN WRAPPED AROUND THE CABLE IT WILL WRAP OVER ITSELF, PROTECTING THE WRITING.
5. FACP AND OTHER PANELS SHALL BE MOUNTED WITH CLEARANCES FOR OBSERVATION AND TESTING. ALL OTHER FIRE ALARM JUNCTION BOXES SHALL BE MARKED FOR IDENTIFICATION.
6. PROVIDE 120V 20A DEDICATED BRANCH CIRCUITS TO CONTROL PANELS, TERMINAL CABINETS, ETC. AS REQUIRED. THE CIRCUIT BREAKER SHALL HAVE A LOCK TO PREVENT ACCIDENTAL SHUT OFF AND BE CLEARLY MARKED "FIRE ALARM CIRCUIT CONTROL" IN THE PANEL BOARD DIRECTORY.
7. SPACE DETECTORS IN ACCORDANCE WITH THE MANUFACTURERS RECOMMENDED DISTANCE. PROVIDE ADDITIONAL DETECTORS WHERE REQUIRED.
8. ALL LOW VOLTAGE FIRE ALARM CIRCUITS MAY OCCUPY A COMMON CONDUIT. RUN AC POWER AND CONTROL WIRING (FAN SHUTDOWN, ETC.) IN SEPARATE CONDUIT. DO NOT RUN WITH ANY OTHER FIRE ALARM SYSTEM WIRING IN A COMMON CONDUIT.
9. ALL CONDUIT, MOUNTING BOXES AND PANELS SHALL BE HUNG AND FASTENED WITH FITTINGS TO ENSURE POSITIVE GROUNDING THROUGHOUT THE ENTIRE SYSTEM.
10. TRANSPOSING OR CHANGING COLOR CODING OF WIRES IS NOT PERMITTED. ALL CONDUCTORS IN CONDUIT CONTAINING MORE THAN ONE WIRE SHALL BE LABELED ON EACH END WITH "E-Z MARKERS".
11. CONDUCTORS IN CABINETS SHALL BE FORMED AND HARNESSED SO THAT EACH DROPS OFF DIRECTLY OPPOSITE TO ITS TERMINAL.
12. ALL WIRING SHALL BE CHECKED AND TESTED TO ENSURE THAT THERE ARE NO GROUNDS, OPENS, OR SHORTS.
13. WIRING COLOR CODES SHALL BE CONSISTENT THROUGHOUT THE SYSTEM AND SHALL ALLOW FOR EASY IDENTIFICATION OF INITIATING, INDICATING AND AUXILIARY CONTROLS CIRCUITS.
14. LOCATE REMOTE TEST SWITCH AND PILOT LIGHT FOR ABOVE CEILING MOUNTED DUCT DETECTORS, FLUSH IN CEILING DIRECTLY BELOW DETECTOR.
15. THE FIRE ALARM RISER DENOTES THE GENERAL ARRANGEMENT OF THE SYSTEM WITH TYPICAL DEVICES AND MINIMUM QUANTITIES OF TERMINAL CABINETS & POWER BOOSTERS. PROVIDE ADDITIONAL TERMINAL CABINETS, BOOSTERS, ETC. AS REQUIRED TO PROVIDE A COMPLETE AND OPERATIONAL SYSTEM.
16. REFER TO SPECIFICATIONS FOR ADDITIONAL MONITORING POINTS.
17. ALL STROBES SHALL BE SYNCHRONIZED AT END OF CONSTRUCTION.
18. ALL FIRE ALARM WIRING SHALL BE "CLASS A".
19. COORDINATE ALL WORK WITH BUILDING FIRE ALARM CONTRACTOR.
20. AS PER NFPA 72 SMOKE DETECTORS SHALL NOT BE INSTALLED UNTIL AFTER THE CONSTRUCTION CLEANUP OF ALL TRADES IS COMPLETE AND FINAL.
21. CONTRACTOR SHALL COORDINATE THE LOCATION OF KNOX BOX WITH LOCAL A.H.J. PRIOR TO INSTALLATION.
22. ALL 110CD MINI-HORNS AND LIGHTS IN ALL HANDICAPPED/HEARING IMPAIRED UNITS SHALL BE MOUNTED AT 24" BELOW CEILING OR THE ELECTRICAL CONTRACTOR IS RESPONSIBLE FOR PROVIDING 177CD MINI-HORNS AND LIGHTS.

WB&A
Wozny/Barbar & Associates, Inc.
CONSULTING ENGINEERS
1076 Washington Street
Hanover, MA 02339
Tel: (781) 826-4144
Fax: (781) 924-5792
www.wbaengineers.com
161 Exchange Street
3rd Floor
Pawtucket, RI 02860

Date issued:

07.15.19

WINSLOW ARCHITECTS INC
89 MASSACHUSETTS AVE.
ARLINGTON, MA 02474
P: 781 648.6600
F: 781 648.6601
www.winslowarchitects.com

Owner/Developer:

MEDFIELD GREEN LLC.

Project:

MEDFIELD GREEN

Drawing:

Electrical
Fire Alarm Riser Diagram Buildings 1,2,6,7 & 8

Revisions:

No.	Description	Date

Stamp:

ANY REPRODUCTION, POSSESSION OR USE OF THIS DRAWING WITHOUT THE WRITTEN PERMISSION OF WINSLOW ARCHITECTS INC. IS PROHIBITED. VIOLATORS WILL BE PROSECUTED TO THE FULL EXTENT OF THE LAW.

© 2019 WINSLOW ARCHITECTS, INC.

Project number:

16-515

Sheet:

E-202

7/16/2019 4:13 PM

MECHANICAL EQUIPMENT CONNECTION SCHEDULE

ITEM	EQUIPMENT DESCRIPTION	ELECTRICAL RATING								TYPE OF CONNECTION REQUIRED														FEEDER INFORMATION	REMARKS
		HP	MCA	KW (Watt)	VOLTAGE	PH	PANEL	CIRCUIT	C/B SIZE	NOTE 1 GF 1E	NOTE 2 WP 2	NOTE 3 GF 3E WP 3			DIRECT CONN			VFD	WP	RTS	S_D	CM		
FCU 1	FAN COIL UNIT	1/5			120	1	SEE FLOOR PLANS	SEE SCHEDULE	15A–1P								✓								
FCU 2	FAN COIL UNIT	1/5			120	1	SEE FLOOR PLANS	SEE SCHEDULE	15A–1P								✓								
FCU 3	FAN COIL UNIT	1/3			120	1	SEE FLOOR PLANS	SEE SCHEDULE	15A–1P								✓								
FCU 4	FAN COIL UNIT	1/3			120	1	SEE FLOOR PLANS	SEE SCHEDULE	15A–1P								✓								
ACCU 1	CONDENSING UNIT		11.7		230/240	1	SEE FLOOR PLANS	SEE SCHEDULE	15A–2P			✓					✓			✓				
ACCU 2	CONDENSING UNIT		17.5		230/240	1	SEE FLOOR PLANS	SEE SCHEDULE	25A–2P			✓					✓			✓				
ACCU 3	CONDENSING UNIT		18.8		230/240	1	SEE FLOOR PLANS	SEE SCHEDULE	30A–2P			✓					✓			✓				
ACCU 4	CONDENSING UNIT		22.0		230/240	1	SEE FLOOR PLANS	SEE SCHEDULE	35A–2P			✓					✓			✓				
ACCU 5	CONDENSING UNIT		19.1		230/240	1	SEE FLOOR PLANS	SEE SCHEDULE	30A–2P			✓					✓			✓				
ACCU 6	CONDENSING UNIT		19.1		230/240	1	SEE FLOOR PLANS	SEE SCHEDULE	30A–2P			✓					✓			✓				
ACCU 7	CONDENSING UNIT		20.6		230/240	1	SEE FLOOR PLANS	SEE SCHEDULE	30A–2P			✓					✓			✓				
ACCU 8	CONDENSING UNIT		20.6		230/240	1	SEE FLOOR PLANS	SEE SCHEDULE	30A–2P			✓					✓			✓				
ACCU 9	CONDENSING UNIT		29.1		230/240	1	SEE FLOOR PLANS	SEE SCHEDULE	50A–2P			✓					✓			✓				
ACCU 10	CONDENSING UNIT		29.1		230/240	1	SEE FLOOR PLANS	SEE SCHEDULE	50A–2P			✓					✓			✓				
ACCU 11	CONDENSING UNIT		29.3		230/240	1	SEE FLOOR PLANS	SEE SCHEDULE	50A–2P			✓					✓			✓				
ACCU 12	CONDENSING UNIT		30.5		230/240	1	SEE FLOOR PLANS	SEE SCHEDULE	40A–2P			✓					✓			✓				
ACCU 13	CONDENSING UNIT		10.0		230/240	1	SEE FLOOR PLANS	SEE SCHEDULE	15A–2P			✓					✓			✓				
AC 1	HEAT PUMP SYSTEM		–			1	SEE FLOOR PLANS	SEE SCHEDULE	–								✓								SEE NOTE #6
AC 2	HEAT PUMP SYSTEM		–			1	SEE FLOOR PLANS	SEE SCHEDULE	–								✓								SEE NOTE #6
HP 1	HEAT PUMP SYSTEM		–			1	SEE FLOOR PLANS	SEE SCHEDULE	–								✓								SEE NOTE #6
EWH 1	ELECTRIC HEATER			4.0	230/240	1	SEE FLOOR PLANS	SEE SCHEDULE	30A–2P								✓								
EWH 2	ELECTRIC HEATER			0.5	120	1	SEE FLOOR PLANS	SEE SCHEDULE	20A–1P								✓								
EUH 1	ELECTRIC HEATER			1.5	230/240	1	SEE FLOOR PLANS	SEE SCHEDULE	20A–2P								✓								
EUH 1	ELECTRIC HEATER			3.0	230/240	1	SEE FLOOR PLANS	SEE SCHEDULE	20A–2P								✓								
EF 1	EXHAUST FAN			(6.0)	120	1	SEE FLOOR PLANS	SEE SCHEDULE	20A–1P								✓								
EF 2	EXHAUST FAN			(225)	120	1	SEE FLOOR PLANS	SEE SCHEDULE	20A–1P								✓								
EF 3	EXHAUST FAN	1/10			120	1	SEE FLOOR PLANS	SEE SCHEDULE	20A–1P								✓								
EF 1	EXHAUST FAN	1/10			120	1	SEE FLOOR PLANS	SEE SCHEDULE	20A–1P								✓								
CP 1	CONDENSATE PUMP	1/50			120	1	SEE FLOOR PLANS	SEE SCHEDULE	20A–1P								✓								
PF 1	PADDLE FAN			(107)	120	1	SEE FLOOR PLANS	SEE SCHEDULE	15A–1P								✓								
PF 2	PADDLE FAN			(107)	120	1	SEE FLOOR PLANS	SEE SCHEDULE	15A–1P								✓								
GF 1	GAS FIRED FURNACE	1/2		(107)	120	1	SEE FLOOR PLANS	SEE SCHEDULE	15A–1P	✓							✓								
GF 2	GAS FIRED FURNACE	1/2			120	1	SEE FLOOR PLANS	SEE SCHEDULE	15A–1P	✓							✓								
GF 3	GAS FIRED FURNACE	1/2			120	1	SEE FLOOR PLANS	SEE SCHEDULE	15A–1P	✓							✓								
GF 4	GAS FIRED FURNACE	1/2			120	1	SEE FLOOR PLANS	SEE SCHEDULE	15A–1P	✓							✓								
GF 5	GAS FIRED FURNACE	1.0			120	1	SEE FLOOR PLANS	SEE SCHEDULE	20A–1P	✓							✓								
GF 6	GAS FIRED FURNACE	3/4			120	1	SEE FLOOR PLANS	SEE SCHEDULE	15A–1P	✓							✓								
GF 7	GAS FIRED FURNACE	3/4			120	1	SEE FLOOR PLANS	SEE SCHEDULE	15A–1P	✓							✓								
GWH 1	GAS WATER HEATER				120	1	SEE FLOOR PLANS	SEE SCHEDULE	20A–1P								✓								
EWH 1	ELEC WATER HEATER				120	1	SEE FLOOR PLANS	SEE SCHEDULE	20A–1P																
FSD	FIRE SMOKE DAMPER				120	1	SEE FLOOR PLANS	SEE SCHEDULE	20A–1P			✓												REFER TO SCHEDULE	
MD	MOTORIZED DAMPER				120	1	SEE FLOOR PLANS	SEE SCHEDULE	20A–1P			✓												REFER TO SCHEDULE	

MECHANICAL SCHEDULE NOTES:

1. PROVIDE DEDICATED CIRCUIT AND GFI DUPLEX RECEPTACLE FOR CONDENSATE PUMPS AS REQUIRED. REFER TO MECHANICAL PLANS FOR EXACT LOCATIONS AND QUANTITIES.
2. PROVIDE SURFACE MOUNTED, WEATHER PROOF, INDUSTRIAL "JELLY JAR" LIGHT FIXTURE. FIXTURE MOUNTED TO MECHANICAL UNIT. STONCO; ROUGHLYTE SERIES OR EQUAL. CONTRACTOR TO PROVIDE LAMP AND WEATHER PROOF SWITCH.
3. PROVIDE SURFACE MOUNTED, WEATHER PROOF, GFI, DUPLEX RECEPTACLE. RECEPTACLE MOUNTED TO MECHANICAL UNIT. REFER TO ELECTRICAL PLANS FOR EXACT LOCATIONS AND QUANTITIES.
4. CONTRACTOR TO COORDINATE EXACT LOCATION IN FIELD WITH OWNER/ARCHITECT PRIOR TO INSTALLATION.
5. RTU'S SHALL HAVE A SINGLE POINT CONNECTION.
6. INDOOR UNIT POWERED FROM THE OUTDOOR CONDENSING UNIT.

SITE LIGHTING FIXTURE SCHEDULE

TYPE	DESCRIPTION	MANUFACTURER & CATALOG NUMBER	LAMPS		INPUT		REMARKS
			NUMBER	TYPE	VOLTS	WATTS	
A	SITE LIGHT LED TRADITIONAL STYLED COLONIAL LIGHT FIXTURE	STERNBERG LIGHTING: 1843–XRLED CARSON CITY SERIES. TYPE III. 1843.XRLED.12L4573. MDL21.CSA. MOUNTED @14'	1	LED	UNV	54W	SEE NOTES BELOW
B	SITE LIGHT LED TRADITIONAL STYLED COLONIAL LIGHT FIXTURE	STERNBERG LIGHTING: 1843–XRLED CARSON CITY SERIES. TYPE III WITH FLAT PANEL ON TWO SIDES. 1843.XRLED.12L4573. MDL21.CSA.HSS.MOUNTED @14'	1	LED	UNV	54W	SEE NOTES BELOW
C	SITE LIGHT LED TRADITIONAL STYLED COLONIAL LIGHT FIXTURE	STERNBERG LIGHTING: 1843–XRLED CARSON CITY SERIES. TYPE V. 1843.XRLED.12L4573. MDL21.CSA. MOUNTED @14'	1	LED	UNV	54W	SEE NOTES BELOW
D	SITE LIGHT LED TRADITIONAL STYLED COLONIAL LIGHT FIXTURE	STERNBERG LIGHTING: 1843–XRLED CARSON CITY SERIES. TYPE V. 1843.XRLED.12L4573. MDL21.CSA. MOUNTED @14'	1	LED	UNV	54W	SEE NOTES BELOW
E	LED SIGN UPLIGHT	DELTA STAR: DS.LED.e64.MFL.A9.BZP.12.11.	1	LED	UNV	–	OR APPROVED EQUAL SEE NOTES BELOW

FIXTURE SCHEDULE NOTES:

1. ELECTRICAL CONTRACTOR SHALL CONFIRM FIXTURE, POLE BASE AND COVER COLOR/FINISH WITH SITE/CIVIL ENGINEER AND LANDSCAPE ARCHITECT.
2. CONTRACTOR SHALL CONFIRM QUANTITY AND LOCATION OF FIXTURES WITH SITE/CIVIL ENGINEER AND LANDSCAPE ARCHITECT.

LIGHTING FIXTURE SCHEDULE

TYPE	DESCRIPTION	MANUFACTURER & CATALOG NUMBER	NUMBER	TYPE	VOLTS	WATTS	REMARKS
		UNIT LIGHT FIXTURES					
C1	1'X4' LINEAR WRAP	PHILIPS DAY–BRITE: OWL 4 40L 835 UNV	1	4000 LUMENS 80CRI 3500K LED	120	33	UNIT KITCHEN
C2	7" ROUND SLIM SURFACE	PHILIPS LIGHTOLIER: S7R930K10W Z10U	1	1000 LUMEN 3000K LED	120	14	UNIT LIVING/DINING
C3	5" ROUND SLIM SURFACE	PHILIPS LIGHTOLIER: S5R 9 30K 7 W Z10U	0	650 LUMEN 3000K LED	120	10	UNIT CORRIDOR
C4	7" ROUND SLIM SURFACE	PHILIPS LIGHTOLIER: S7R930K10W Z10U	1	1000 LUMEN 3000K LED	120	14	UNIT BEDROOM
C5	ROUND SATIN NICKEL OPAL WHITE ACRYLIC LENS 5x2	ASL: HRO DVD FCU LCU FUS CT	1	3000K LED	120	12	COMMON CORRIDOR
C7	2'X4' UTILITY LIGHT	PHILIPS DAY–BRITE: 2SCA36L8304DSUNVDIM	1	3600 LUMENS LED	120	30	UTILITY ROOMS
V	VANITY WALL MTD FIXTURE 25" LONG	BORDEN LIGHTING: 572–25 LED 1/14 120 MW	1	LED	120	14	UNIT VANITY BATHROOM
F/L	FAN/LIGHT EXHAUST FAN	MECHANICAL CONTRACTOR SHALL PURCHASE AND INSTALL. EC SHALL WIRE TO BRANCH CIRCUIT	1	GU24 LED	120	0	BATHROOM FAN/LIGHT THIS IS OWNED AND INSTALLED BY MECHANICAL CONTRACTOR WIRED BY E.C. EC TO PROVIDE CONTINUOUS POWER AND 2 SWITCH LEGS 1–LIGHT–1 FAN
UC	UNDER CABINET FIXTURE 28"L	PHILIPS BAY–BRITE: L1NCS100EL28930120SWH DIM SURFACE MOUNTED TRIM	1	LED	120	7	
X1	EXTERIOR WALL MOUNTED	PHILIPS GARDCO: 101L 16L 530 WW–G1 2 120 PCB BK	1	LED	120	28	PROVIDE WITH EBPC EMERGENCY BATTER PACK
ST1	BI–LEVEL OCC SENSOR CONTROLLED LIGHT	COLUMBIA: #LBIL4.40LW.EDU.ELL14	1	LED	120	31	LOCATED IN STAIRWELLS 50% DIMMING W/ INTEGRAL OCCUPANCY SENSOR. FIXTURE W/ EM BATTERY
FW1E	EXTERIOR WALL MOUNTED SCONCE WITH EMERGENCY BATTERY BACKUP	AMERICAL FLUORESCENT: FUW213SNEC–EM	1	F13/830	120	26	ADA COMPLIANT
⊗	LED EXIT	EXITRONIX: VLEDC–51 RED		LED	120V	4	
EB	DECORATIVE EMERGENCY BATTERY UNIT	DUALITE: EV2	2	6V5W MR16	6 /120V	11	ENERGY STAR SELF CONTAINED NiCad

LIGHTING FIXTURE NOTES:

1. CONTRACTOR SHALL CONFIRM FIXTURE FINISH AND LAMP COLOR WITH ARCHITECT.
2. CONTRACTOR SHALL CONFIRM STEM LENGTH, LENS TYPE, LAMP THROW WITH ARCHITECT. FURNISH AND INSTALL ALL LOW VOLTAGE WIRING AND TRANSFORMERS FOR A COMPLETE AND OPERATIONAL SYSTEM.
3. CONTRACTOR SHALL CONFIRM LENGTHS OF LED STRIP WITH ARCHITECT. FURNISH AND INSTALL ALL LOW VOLTAGE WIRING AND TRANSFORMERS TO COMPLETE SYSTEM.
4. CONTRACTOR SHALL CONFIRM CEILING OR PENDENT MOUNT. REFER TO LATEST ARCHITECTURAL RCP AND SECTIONS.

LIGHTING NOTES

1. FURNISH ALL LIGHTING FIXTURES COMPLETE WITH MOUNTING ACCESSORIES TO MEET JOB REQUIREMENTS VERIFY FIXTURE MOUNTING AND LOCATION AGAINST ARCHITECTS PLANS, ELEVATIONS AND DETAIL DRAWINGS. EXACT LOCATION OF ALL FIXTURES SHALL BE CONFIRMED WITH THE ARCHITECT PRIOR TO ROUGHING IN.
2. SERIES FIXTURES SHALL SATISFY LENGTHS AS SHOWN ON THE DRAWINGS.
3. FIXTURE LETTERS SHOWN ONCE ON A CONTINUOUS ROW OF FIXTURES SHALL BE TYPICAL FOR THAT ROW UNLESS OTHERWISE NOTED.
4. ALL FIXTURES SHALL BE SUPPORTED FROM THE BUILDING STRUCTURE, INDEPENDENT OF HUNG CEILING WITH ROD OR JACK CHAIN SUPPORT. STEM LENGTHS, STEM FINISHES AND STEM LOCATIONS OF ALL PENDANT FIXTURES TO BE VERIFIED AND CONFIRMED BY OWNER, ARCHITECT AND ENGINEER PRIOR TO ORDERING STEMS.
5. ALL INCANDESCENT LAMPS SHALL BE RATED 120 VOLTS UNLESS OTHERWISE SPECIFIED.
6. ALL FLUORESCENT TUBE LAMPS SHALL BE ENERGY SAVING TYPE. SYLVANIA FLUORESCENT "OCTRON" OR APPROVED EQUAL.
7. ALL FLUORESCENT BALLAST'S UNLESS NOTED OTHERWISE SHALL BE 120V ELECTRONIC TYPE, U.L. APPROVED AS A COMBINATION WITH OCTRON LAMPS. ALL T8, FLUORESCENT AND COMPACT FLUORESCENT BALLAST'S SHALL BE OF THE HPF ELECTRONIC TYPE WHERE THAT OPTION IS AVAILABLE. WHERE HPF ELECTRONIC BALLAST'S ARE NOT AVAILABLE, USE PREMIUM LOW ENERGY HPF MAGNETIC BALLAST'S.
8. "ALTERNATE MANUFACTURER" AND "OR APPROVED EQUAL" MEANS EQUIVALENT OR SUPERIOR IN PERFORMANCE, MATERIALS, WORKMANSHIP AND APPEARANCE TO THE SPECIFIED EQUIPMENT.
9. ELECTRICAL CONTRACTOR SHALL PROVIDE AND INSTALL ALL TRANSFORMERS AND/OR BALLAST'S REQUIRED TO OPERATE ALL LAMPS SPECIFIED, INCLUDING REMOTE BALLASTS AND/OR TRANSFORMERS AND THE ENCLOSURES FOR SAME. ELECTRICAL CONTRACTOR SHALL BE RESPONSIBLE FOR VERIFICATION OF COMPATIBILITY BETWEEN LAMPS SPECIFIED, BALLAST'S AND/OR TRANSFORMERS SPECIFIED, AND DIMMING AND OTHER CONTROL DEVICES SPECIFIED. NOTIFY ARCHITECT AND ENGINEER CONSULTANT OF ANY INCOMPATIBILITY PRIOR TO ORDERING EQUIPMENT.
10. ELECTRICAL SUBCONTRACTOR SHALL BE RESPONSIBLE FOR VERIFYING THE COORDINATION OF ALL LIGHTING EQUIPMENT AND CONTROL DEVICES WITH CEILING AND WALL TYPES SPECIFIED PRIOR TO ORDERING LIGHTING EQUIPMENT.
11. IN ADDITION TO ANY SUBMITTAL REQUIREMENTS STATED IN ELECTRICAL SPECIFICATIONS OF CONTRACT DOCUMENTS, SHOP DRAWINGS AND PRODUCT DATA SUBMITTALS SHALL INCLUDE PHYSICAL DIMENSIONS, PHOTOMETRICS, SPECIFIC LAMP TYPE AND MOUNTING DETAILS.
12. PRELIMINARY AIMING OF ALL ADJUSTABLE LIGHTING EQUIPMENT SHALL BE DONE DURING INSTALLATION BY THE ELECTRICAL CONTRACTOR AS INDICATED ON THE LIGHTING PLANS/AIMING DIAGRAM, WHERE SUCH A DIAGRAM IS INCLUDED IN CONTRACT DOCUMENTS OR AS AN ADDENDUM. FINAL AIMING OF ALL ADJUSTABLE LIGHTING EQUIPMENT SHALL BE DONE BY THE ELECTRICAL CONTRACTOR AS DIRECTED BY THE ARCHITECT.
13. IN ALL FIXTURES WITH ADJUSTABLE SOCKETS, SET SOCKETS DURING INSTALLATION TO LOCATE SPECIFIED LAMP IN CORRECT RELATIONSHIP TO REFLECTOR AS RECOMMENDED BY FIXTURE MANUFACTURER.
14. INSTALL CONES IN WALLWASHERS WITH CUTOUT(S) IN INNER REFLECTOR FACING WALL(S) TO BE LIT.
15. UNLESS NOTED TO THE CONTRARY PROVIDE WHITE CEILING TRIMS FOR ALL RECESSED LUMINAIRES
16. WHERE CONTROL DEVICES WITH FINNED HEAT SINKS, SUCH AS LUTON "NOVA" SERIES, ARE SPECIFIED, FINS SHALL NOT BE REMOVED TO MAKE DEVICES FIT BOXES MORE CONVENIENTLY. REFER TO MANUFACTURERS SPECIFICATIONS FOR THE NUMBER OF GANG BOXES REQUIRED TO ACCOMMODATE THE SPECIFIED EQUIPMENT WITHOUT BREAKING OFF FINS.
17. RELAYS USED FOR CONTROL OF LIGHTING (IF ANY) SHALL BE LOCATED AND THE LOCATION SOUNDPROOFED SO AS TO BE INAUDIBLE FROM NORMALLY OCCUPIED AREAS WHEN ACTIVATED.
18. TO ASSURE THE MINIMIZATION OF NOISE, FIXTURES MUST BE MOUNTED SECURELY TO THE SUPPORTING STRUCTURE, AND ALL LOOSE INTERNAL PARTS MUST BE SECURELY TIGHTENED BEFORE ACTIVATING CIRCUITS. WHERE TRANSFORMERS HAVE SELECTOR SWITCHES TO ALLOW USE OF VARIOUS WATTAGE LAMPS, THESE SWITCHES MUST BE SET TO THE WATTAGE OF THE SPECIFIED LAMP. ELECTRICAL CONTRACTOR SHALL PROVIDE DIRECTIONAL ARROWS ON EXIT SIGNS AS INDICATED ON LIGHTING FLOOR PLANS.
19. ALL EXIT SIGNS SHALL BE SUPPLIED WITH AN INTERNAL, 90 MINUTE, EMERGENCY BATTERY. THE ELECTRICAL CONTRACTOR SHALL FIELD INSTALL BODINE "B50" EMERGENCY BALLAST WITH REMOTE TEST SWITCH.
20. IN AN ACCESSIBLE LOCATION FOR 2–LAMP EMERGENCY OPERATION OF FIXTURE. COORDINATE LIGHTING FIXTURE MOUNTING HEIGHTS WITH ARCHITECTURAL CASEWORK OR INTERIOR ELEVATION DRAWINGS.
21. COORDINATE EXACT LIGHTING FIXTURE LOCATIONS AND LENGTHS WITH ARCHITECTURAL REFLECTED CEILING PLAN.
22. PROVIDE "HOT" UNSWITCHED POWER AT ALL LIFE SAFETY BATTERY BALLASTS AND EXIT SIGNS.
23. BRANCH CIRCUITS SHALL BE 3 WIRE WHERE REQUIRED. ALL EXIT SIGNS SHALL BE SUPPLIED WITH INTERNAL, 90 MINUTE, EMERGENCY BATTERY. ELECTRICAL CONTRACTOR SHALL PROVIDE AND INSTALL ANY STEP DOWN TRANSFORMERS, WIRING, AND CONTROLS FOR LOW VOLTAGE LIGHTING WHERE NECESSARY.
24. THE ELECTRICAL CONTRACTOR SHALL PROVIDE ALL MOUNTING HARDWARE APPLICABLE TO CEILING TYPE INTO WHICH FIXTURE IS TO BE INSTALLED. REFER TO ARCHITECTS REFLECTED CEILING PLAN FOR CEILING MATERIALS.
25. ALL EMERGENCY BATTERY PACKS SHALL BE SUPPLIED WITH CONTACTS TO ACCEPT REMOTE EMERGENCY HEADS.
26. WHERE NECESSARY. WHERE LIGHT FIXTURES ARE INSTALLED IN RATED CEILING, THE CONTRACTOR SHALL PROVIDE HOUSING SUITABLE FOR THAT APPLICATION. UL LISTED FIRE RATED BOX ELCO FIRE BOX OR EQUAL.
27. COORDINATE WITH THE ARCHITECTURAL DRAWING THE CEILING TYPES AND PROVIDE IC RATINGS WERE REQUIRED.
28. ALL FIXTURES UTILIZING HID LAMPS SHALL MEET THE ENERGY INDEPENDENT AND SECURITY ACT "EISA".

WB&A
Wozny/Barbar & Associates, Inc.
CONSULTING ENGINEERS
1076 Washington Street, Hanover, MA 02339, Tel: (781) 826-4144, Fax: (781) 924-5792
161 Exchange Street, 3rd Floor, Pawtucket, RI 02860
www.wbaengineers.com

Date issued:

07.15.19

WINSLOW ARCHITECTS INC

89 MASSACHUSETTS AVE.
ARLINGTON, MA 02474

P: 781 648.6600
F: 781 648.6601

www.winslowarchitects.com

Owner/Developer:

MEDFIELD GREEN LLC.

Project:

MEDFIELD GREEN

Drawing:

Electrical Schedules

Revisions:

No.	Description	Date

Stamp:

ANY REPRODUCTION, POSSESSION OR USE OF THIS DRAWING WITHOUT THE WRITTEN PERMISSION OF WINSLOW ARCHITECTS INC. IS PROHIBITED. VIOLATORS WILL BE PROSECUTED TO THE FULL EXTENT OF THE LAW.

© 2019 WINSLOW ARCHITECTS, INC.

Project number:

16-515

Sheet:

E-301

7/16/2019 4:13 PM

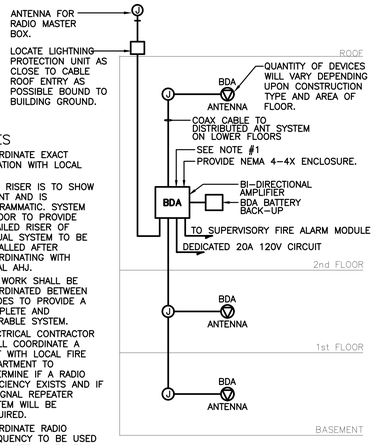

NOTES

1. COORDINATE EXACT LOCATION WITH LOCAL AHJ
2. THIS RISER IS TO SHOW INTENT AND IS DIAGRAMMATIC. SYSTEM VENDOR TO PROVIDE DETAILED RISER OF ACTUAL SYSTEM TO BE INSTALLED AFTER COORDINATING WITH LOCAL AHJ.
3. ALL WORK SHALL BE COORDINATED BETWEEN TRADES TO PROVIDE A COMPLETE AND OPERABLE SYSTEM.
4. ELECTRICAL CONTRACTOR SHALL COORDINATE A TEST WITH LOCAL FIRE DEPARTMENT TO DETERMINE IF A RADIO DEFICIENCY EXISTS AND IF A SIGNAL REPEATER SYSTEM WILL BE REQUIRED.
5. COORDINATE RADIO FREQUENCY TO BE USED FOR SYSTEM MATCHES THE FREQUENCY USED BY LOCAL FIRE DEPARTMENT.

TYPICAL BDA WIRING DIAGRAM | NTS

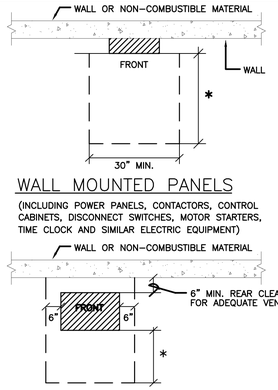

NOTES:

1. "*" DENOTES MINIMUM WORKING CLEARANCE (IN THE DIRECTION OF ACCESS TO LIVE PARTS) REQUIRED BY N.E.C. 110-26(a).
   - 3 FT. FOR 0-150 VOLT TO GROUND ELECTRIC EQUIPMENT
   - 3 1/2 FT. FOR 150-600 VOLT TO GROUND (CONDITION 2 "LIVE TO GROUND")
   - 4 FT. FOR 150-600 VOLT TO GROUND (CONDITION 3 "LIVE EQUIPMENT TO LIVE EQUIPMENT")
2. THE MINIMUM HEADROOM OF WORKING SPACE SHALL BE 6 1/2 FT.

REQUIRED CLEARANCE FOR ELECTRICAL EQUIPMENT | NTS

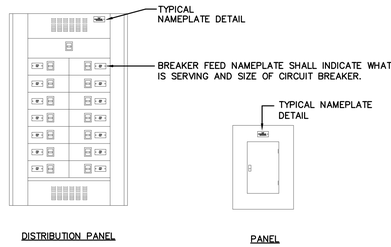

TYPICAL PANEL NAMEPLATE LOCATIONS | NTS

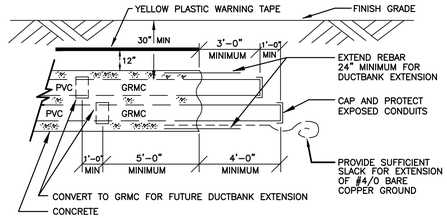

NOTE:

1. REFER TO SITE PLANS FOR DUCTBANK TYPES AND THE LOCATIONS FOR TERMINATING DUCTBANK.

TYPICAL DUCTBANK TERMINATION DETAIL | NTS

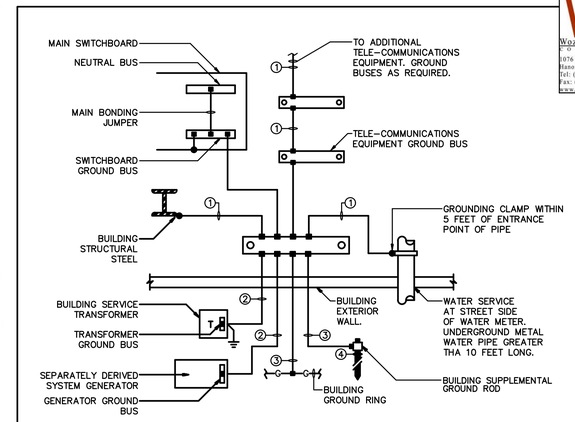

LEGEND

- ● INDICATES BOLTED CONNECTION
- ■ INDICATES EXOTHERMIC WELD CONNECTION, COMPATIBLE WITH MATERIALS BEING JOINED
- ① 4/0 AWG INSULATED COPPER GROUND CONDUCTOR IN 1 1/4" CONDUIT
- ② 4/0 AWG COPPER GROUND CONDUCTOR ENCASED IN CONCRETE
- ③ 4/0 AWG BARE COPPER GROUND CONDUCTOR
- ④ 3/4" x 10'-0" LONG COPPER-CLAD GROUND ROD DRIVEN WITH TOP 1'-0" BELOW GRADE

BUILDING GROUNDING ELECTRODE SYSTEM DETAIL | NTS

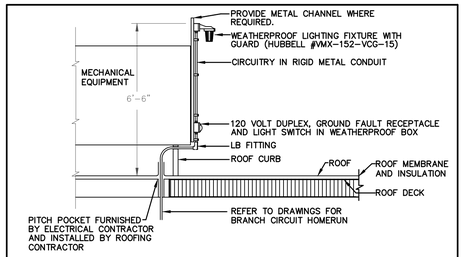

ROOF TOP MECHANICAL EQUIPMENT LIGHTING & RECEPTACLE DETAIL | NTS

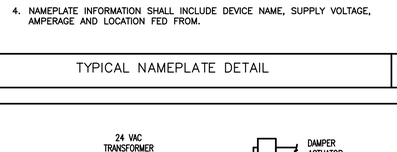

NOTES:

1. REFER TO SPECIFICATIONS FOR ADDITIONAL NAMEPLATE REQUIREMENTS.
2. NAMEPLATE TO BE 1/16" THICK WHITE PLASTIC WITH BLACK CENTER LAMINATE. FACE SHALL BE WHITE, ENGRAVED LETTERS SHALL BE BLACK.
3. SECURE NAMEPLATE TO SURFACES WITH (2) FLAT HEAD BRASS SCREWS. ADHESIVE CEMENT SHALL NOT BE ALLOWED.
4. NAMEPLATE INFORMATION SHALL INCLUDE DEVICE NAME, SUPPLY VOLTAGE, AMPERAGE AND LOCATION FED FROM.

TYPICAL NAMEPLATE DETAIL | NTS

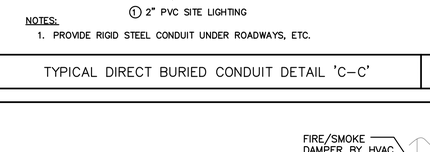

NOTES:

1. PROVIDE RIGID STEEL CONDUIT UNDER ROADWAYS, ETC.

TYPICAL DIRECT BURIED CONDUIT DETAIL 'C-C' | NTS

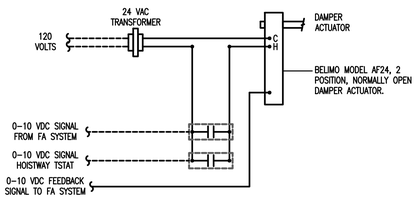

NOTES:

1. THE NORMALLY CLOSED HOISTWAY VENT DAMPER SHALL OPEN UNDER EACH OF THE FOLLOWING CONDITIONS:
   a) BY A SIGNAL FROM AN APPROVED AUTOMATIC THERMOSTAT DESIGNED TO OPEN AT 90 DEGREES F.
   b) BY A SIGNAL FROM THE FIRE ALARM SYSTEM.
   c) IN THE EVENT OF A POWER FAILURE.
2. A SIGNAL SHALL BE SENT TO THE FIRE ALARM PANEL IF UNDER THE ABOVE CONDITIONS THE DAMPER FAILS TO OPEN.

HOISTWAY VENT DAMPER SEQUENCE | NTS

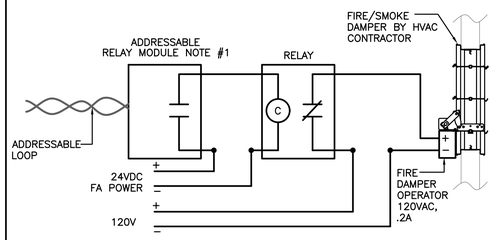

NOTES:

1. MODULE SHALL BE PROGRAMMED TO OPERATE UPON SMOKE DETECTION.
2. SHALL BE LOCATED WITYHIN FIVE FEET HORIZONTALLY OF DAMPER IN AN AIR TRANSFER OPENING IN A WALL.
3. BY THE FLOOR SMOKE DETECTOR WHERE A DAMPER IS IN A CORRIDOR WALL.

FIRE/SMOKE DAMPER WIRING DETAIL | NTS

WB&A
Wozny/Barbar & Associates, Inc.
CONSULTING ENGINEERS
1076 Washington Street, Hanover, MA 02339, Tel: (781) 826-4144, Fax: (781) 924-5792
161 Exchange Street, 3rd Floor, Pawtucket, RI 02860
www.wbassociates.com

Date issued:

07.15.19

WINSLOW ARCHITECTS INC
89 MASSACHUSETTS AVE.
ARLINGTON, MA 02474
P: 781 648.6600
F: 781 648.6601
www.winslowarchitects.com

Owner/Developer:

MEDFIELD GREEN LLC.

Project:

MEDFIELD GREEN

Drawing:

Electrical Details

Revisions:

No.	Description	Date

Stamp:

ANY REPRODUCTION, POSSESSION OR USE OF THIS DRAWING WITHOUT THE WRITTEN PERMISSION OF WINSLOW ARCHITECTS INC. IS PROHIBITED. VIOLATORS WILL BE PROSECUTED TO THE FULL EXTENT OF THE LAW.
© 2019 WINSLOW ARCHITECTS, INC.

Project number:

16-515

Sheet:

E-402

7/16/2019 4:13 PM

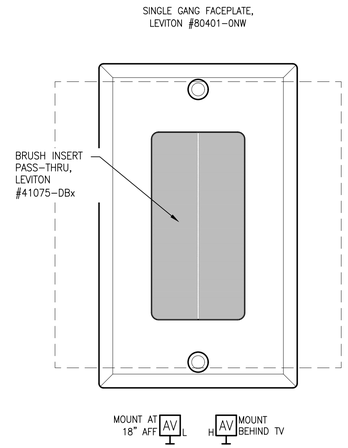

3 AV PASS-THRU WAO

SCALE: NONE

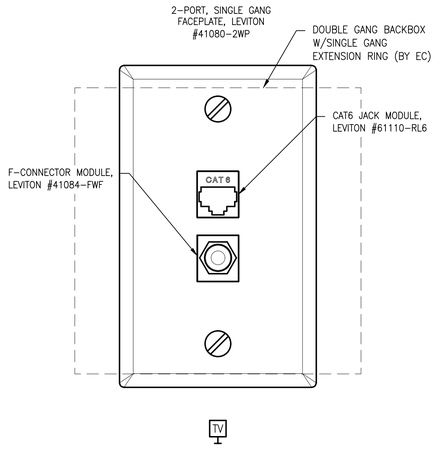

2 UNIT VIDEO/DATA OUTLET

SCALE: NONE

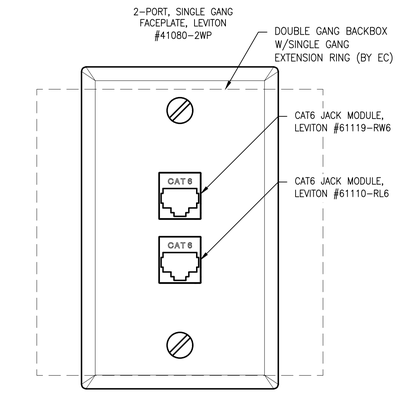

1 UNIT VOICE/DATA OUTLET

SCALE: NONE

WB&A
Wozny/Barbar & Associates, Inc.
CONSULTING ENGINEERS
1076 Washington Street
Hanover, MA 02339
Tel: (781) 826-4144
Fax: (781) 924-5792
www.wbaengineers.com
161 Exchange Street
3rd Floor
Pawtucket, RI 02860

LEGEND

SYMBOL	DESCRIPTION
◀	WALL MOUNTED PHONE OUTLET
H TV	WALL MOUNTED UNIT TELEVISION OUTLET
H AV	WALL MOUNTED AV OUTLET
DS	VIDEO INTERCOM DOOR STATION
TS	VIDEO INTERCOM TENANT STATION
ES	ELECTRIC STRIKE, PROVIDED BY DOOR INSTALLER WIRED BY SECURITY SYSTEM INSTALLER
MD	CEILING MOUNT 90° MOTION DETECTOR
KP	SECURITY SYSTEM ARM/DISARM KEYPAD

ABBREVIATIONS

ABBRV	DESCRIPTION
AP	ACCESS POINT
AFF	ABOVE FINISHED FLOOR
C	CONDUIT
CAT6	CATEGORY 6
CAT6A	AUGMENTED CATEGORY 6
COORD	COORDINATE
CONT	CONTINUATION
EC	ELECTRICAL SUB-CONTRACTOR
EXTR	EXTERIOR
GC	GENERAL CONTRACTOR
HT	HEIGHT
LAN	LOCAL AREA NETWORK
MIN	MINIMUM
MTD	MOUNTED
NIC	NOT IN CONTRACT
OC	ON CENTER
QTY	QUANTITY
TGB	TELECOMMUNICATIONS GROUNDING BUSBAR
TMGB	TELECOMMUNICATIONS MAIN GROUNDING BUSBAR
TO	TELECOMMUNICATIONS OUTLET
TR	TELECOMMUNICATIONS ROOM
TYP	TYPICAL
UNO	UNLESS NOTED OTHERWISE
WAO	WORK AREA OUTLET
WAP	WIRELESS ACCESS POINT

COMMUNICATIONS NOTES:

1. STANDARD OUTLET BOXES, CONDUIT AND PULL STRINGS TO BE PROVIDED AND INSTALLED BY ELECTRICAL SUB-CONTRACTOR. OVERSIZED OUTLET BOXES SHALL BE FURNISHED BY THE INSTALLER FOR INSTALLATION BY THE EC.
2. ALL TELECOMMUNICATIONS WAO TO BE INSTALLED AT SAME HEIGHT AS ASSOCIATED POWER RECEPTACLES, AND PER 521 CMR SECTION 9.5.6., UNO.
3. REFER TO FACEPLATE CONFIGURATION DETAILS TO DETERMINE JACK AND CABLE QUANTITIES.
4. ALL PENETRATIONS OF FIRE RATED ASSEMBLIES SHALL BE SEALED WITH UL CLASSIFIED FIRE STOP SYSTEM(S) EQUIVALENT TO WALL RATING.

Date issued:

07.15.19

WINSLOW ARCHITECTS INC

89 MASSACHUSETTS AVE.
ARLINGTON, MA 02474

P: 781 648.6600
F: 781 648.6601

www.winslowarchitects.com

Owner/Developer:

MEDFIELD GREEN LLC.

Project:

MEDFIELD GREEN

Drawing:

LEGEND, ABBREVIATIONS, GENERAL NOTES AND DETAILS TELE-COM

Revisions:

No.	Description	Date

Stamp:

ANY REPRODUCTION, POSSESSION OR USE OF THIS DRAWING WITHOUT THE WRITTEN PERMISSION OF WINSLOW ARCHITECTS INC. IS PROHIBITED. VIOLATORS WILL BE PROSECUTED TO THE FULL EXTENT OF THE LAW.

© 2019 WINSLOW ARCHITECTS, INC.

Project number:

16-515

Sheet:

T-001

6/19/2019 3:55 PM

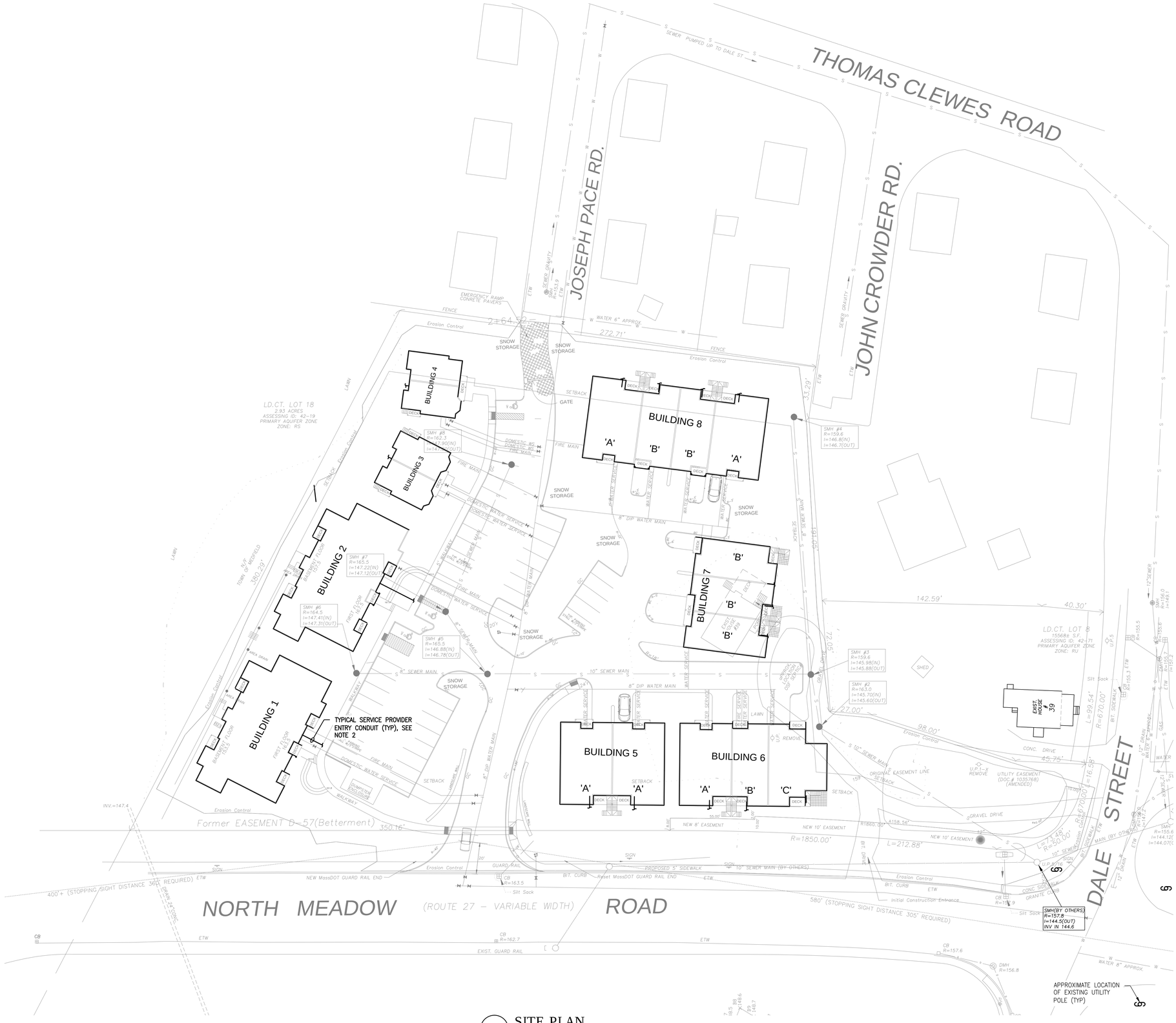

1 SITE PLAN
SCALE: 1" = 30'–0"
0 15' 30' 60'

WB&A
Wozny/Barbar & Associates, Inc.
CONSULTING ENGINEERS
1076 Washington Street
Hanover, MA 02339
Tel: (781) 826-4144
Fax: (781) 924-5792
www.wbaengineers.com

161 Exchange Street
3rd Floor
Pawtucket, RI 02860

NOTES:

1. REFER TO DRAWING **T–001** FOR LEGEND, ABBREVIATIONS, GENERAL NOTES AND DETAILS.
2. SERVICE PROVIDER(S) ARE RESPONSIBLE FOR DESIGN, PERMITTING, GRANTS, ROUTING, INSTALLATION AND ALL RELATED REQUIREMENTS FOR PATHWAYS AND SPACES (CONDUIT, MAINTENANCE HOLES, HAND HOLES, ETC.) IN THE PUBLIC WAY.
3. MAINTENANCE HOLES IN PRIVATE PROPERTY SHALL BE 6'–0"L x 6'–0"W x 8'–0"D, WITH "TELE" OR EQUIVALENT STAMP/SYMBOL ON COVER, WHEN REQUIRED.
4. HAND HOLES SHALL BE QUAZITE PG SERIES 24"W x 36"L x [18", 24", 30", 36", OR 42"]D WITH "TELE" OR EQUIVALENT STAMP/SYMBOL ON COVER, WHEN REQUIRED.
5. CONDUITS RUNNING UNDER AREAS WITH VEHICULAR TRAFFIC MUST BE CONCRETE ENCASED WITH A 24" COVER (MIN) AND 4" CONCRETE ON ALL SIDES. REINFORCE WITH #4 REBAR IN MAIN DRIVE AISLES OR PUBLIC WAYS.
6. DETAILS AND ROUTING INDICATED ARE SCHEMATIC ONLY, COORDINATE INSTALLATION WITH SERVICE PROVIDER(S), CIVIL AND ELECTRICAL.

Date issued:

07.15.19

WINSLOW ARCHITECTS INC

89 MASSACHUSETTS AVE.
ARLINGTON, MA 02474

P: 781 648.6600
F: 781 648.6601

www.winslowarchitects.com

Owner/Developer:

MEDFIELD GREEN LLC.

Project:

MEDFIELD GREEN

Drawing:

SITE PLAN
TELE-COM

Revisions:

No.	Description	Date

Stamp:

ANY REPRODUCTION, POSSESSION OR USE OF THIS DRAWING WITHOUT THE WRITTEN PERMISSION OF WINSLOW ARCHITECTS INC. IS PROHIBITED. VIOLATORS WILL BE PROSECUTED TO THE FULL EXTENT OF THE LAW.

© 2019 WINSLOW ARCHITECTS, INC.

Project number:

16-515

Sheet:

T-002

6/19/2019 1:55 PM

WB&A
Wozny/Barbar & Associates, Inc.
CONSULTING ENGINEERS
1076 Washington Street
Hanover, MA 02339
Tel: (781) 826-4144
Fax: (781) 924-5792
www.wbengineers.com
161 Exchange Street
3rd Floor
Pawtucket, RI 02860

NOTES:

1. REFER TO DRAWING **T–001** FOR LEGEND, ABBREVIATIONS, GENERAL NOTES AND DETAILS.
2. ALL DWELLING UNIT STRUCTURED CABLING SHALL BE TERMINATED UPON HARDWARE LOCATED WITHIN LOCAL STRUCTURED MEDIA ENCLOSURE, SEE DETAIL 1 ON DRAWING **T–501**.

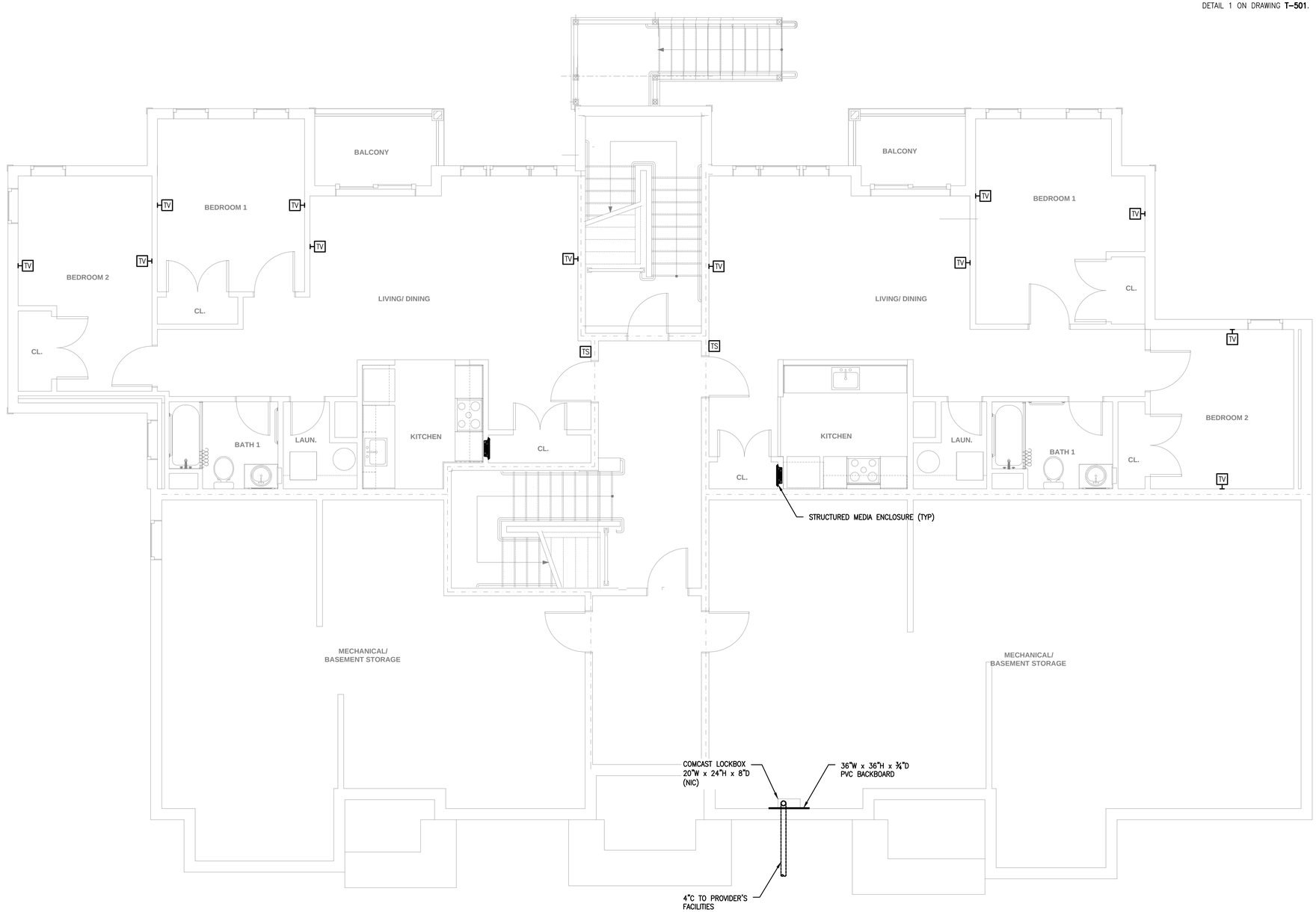

1 BASEMENT
SCALE: 1/4" = 1'–0"

WINSLOW ARCHITECTS INC

89 MASSACHUSETTS AVE.
ARLINGTON, MA 02474

P: 781 648.6600
F: 781 648.6601

www.winslowarchitects.com

Date issued:

07.15.19

Owner/Developer:

MEDFIELD GREEN LLC.

Project:

MEDFIELD GREEN

Drawing:

BUILDING A - BASEMENT PLAN TELE-COM

Revisions:

No.	Description	Date

Stamp:

ANY REPRODUCTION, POSSESSION OR USE OF THIS DRAWING WITHOUT THE WRITTEN PERMISSION OF WINSLOW ARCHITECTS INC. IS PROHIBITED. VIOLATORS WILL BE PROSECUTED TO THE FULL EXTENT OF THE LAW.

© 2019 WINSLOW ARCHITECTS, INC.

Project number:

16-515

Sheet:

T-A-100

7/15/2019 2:22 PM

WB&A
Wozny/Barbar & Associates, Inc.
CONSULTING ENGINEERS
1076 Washington Street
Hanover, MA 02339
Tel: (781) 826-4144
Fax: (781) 924-5792
www.wbengineers.com
161 Exchange Street
3rd Floor
Pawtucket, RI 02860

NOTES:

1. REFER TO DRAWING **T–001** FOR LEGEND, ABBREVIATIONS, GENERAL NOTES AND DETAILS.
2. ALL DWELLING UNIT STRUCTURED CABLING SHALL BE TERMINATED UPON HARDWARE LOCATED WITHIN LOCAL STRUCTURED MEDIA ENCLOSURE, SEE DETAIL 1 ON DRAWING **T–501**.

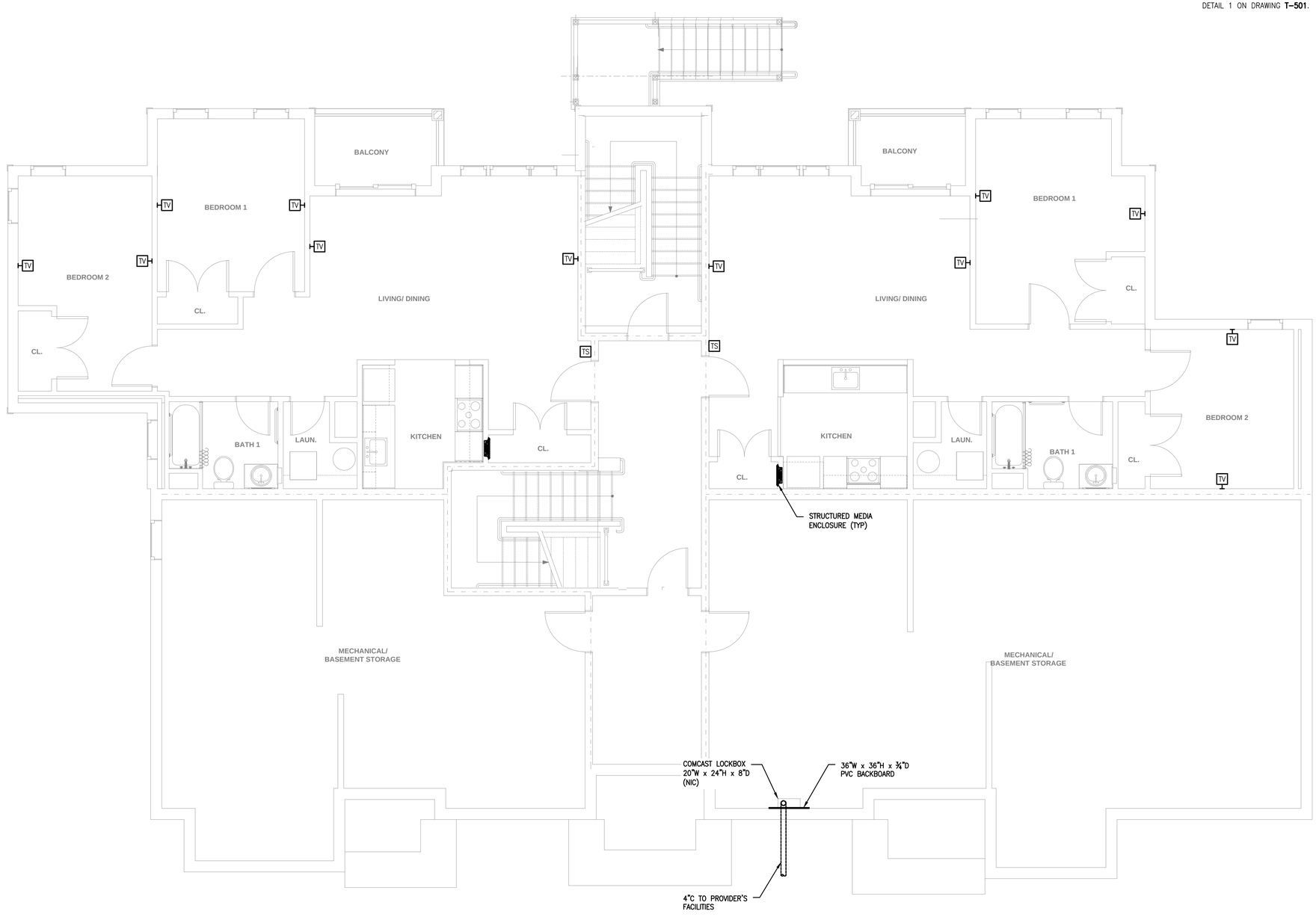

1 BASEMENT
SCALE: 1/8" = 1'–0"

Date issued:

07.15.19

WINSLOW ARCHITECTS INC

89 MASSACHUSETTS AVE.
ARLINGTON, MA 02474

P: 781 648.6600
F: 781 648.6601

www.winslowarchitects.com

Owner/Developer:

MEDFIELD GREEN LLC.

Project:

MEDFIELD GREEN

Drawing:

BUILDING B - BASEMENT PLAN TELE-COM

Revisions:

No.	Description	Date

Stamp:

ANY REPRODUCTION, POSSESSION OR USE OF THIS DRAWING WITHOUT THE WRITTEN PERMISSION OF WINSLOW ARCHITECTS INC. IS PROHIBITED. VIOLATORS WILL BE PROSECUTED TO THE FULL EXTENT OF THE LAW.

© 2019 WINSLOW ARCHITECTS, INC.

Project number:

16-515

Sheet:

T-B-100

7/15/2019 2:25 PM

WB&A
Wozny/Barbar & Associates, Inc.
CONSULTING ENGINEERS
1076 Washington Street
Hanover, MA 02339
Tel: (781) 826-4144
Fax: (781) 924-5792
www.wbaengineers.com
161 Exchange Street
3rd Floor
Pawtucket, RI 02860

NOTES:

1. REFER TO DRAWING **T–001** FOR LEGEND, ABBREVIATIONS, GENERAL NOTES AND DETAILS.
2. ALL DWELLING UNIT STRUCTURED CABLING SHALL BE TERMINATED UPON HARDWARE LOCATED WITHIN LOCAL STRUCTURED MEDIA ENCLOSURE, SEE DETAIL 1 ON DRAWING **T–501**.
3. COORDINATE ACTUAL MOUNTING LOCATION AND TERMINATION TYPE WITH ELEVATOR CONTROLS INSTALLER.

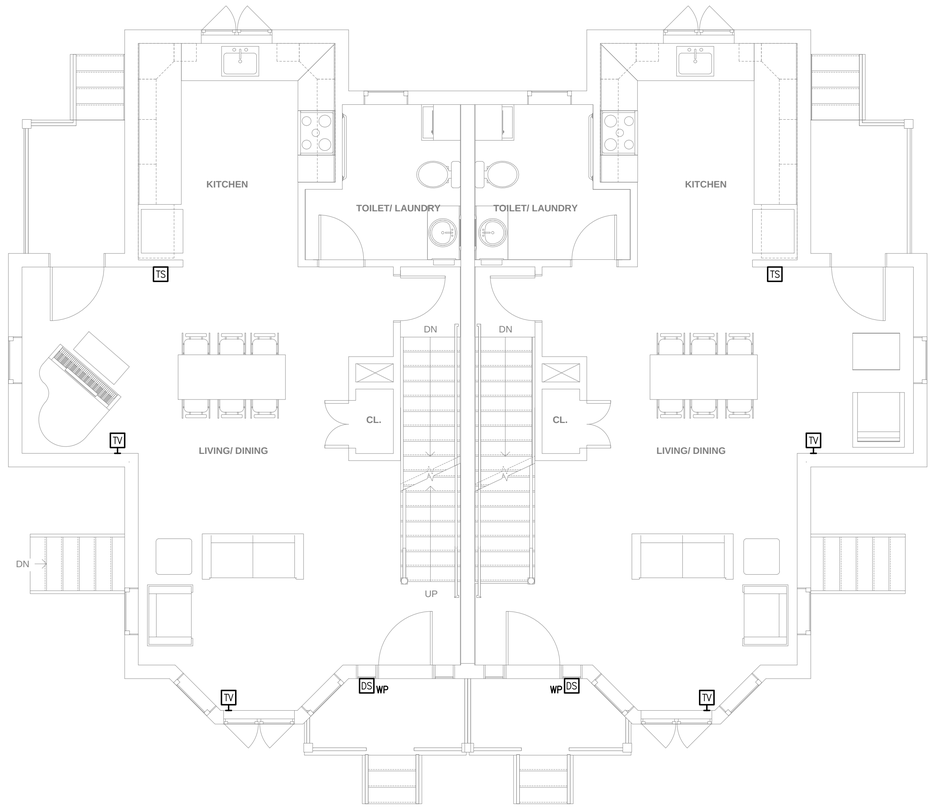

2 FIRST FLOOR
SCALE: 1/4" = 1'–0"

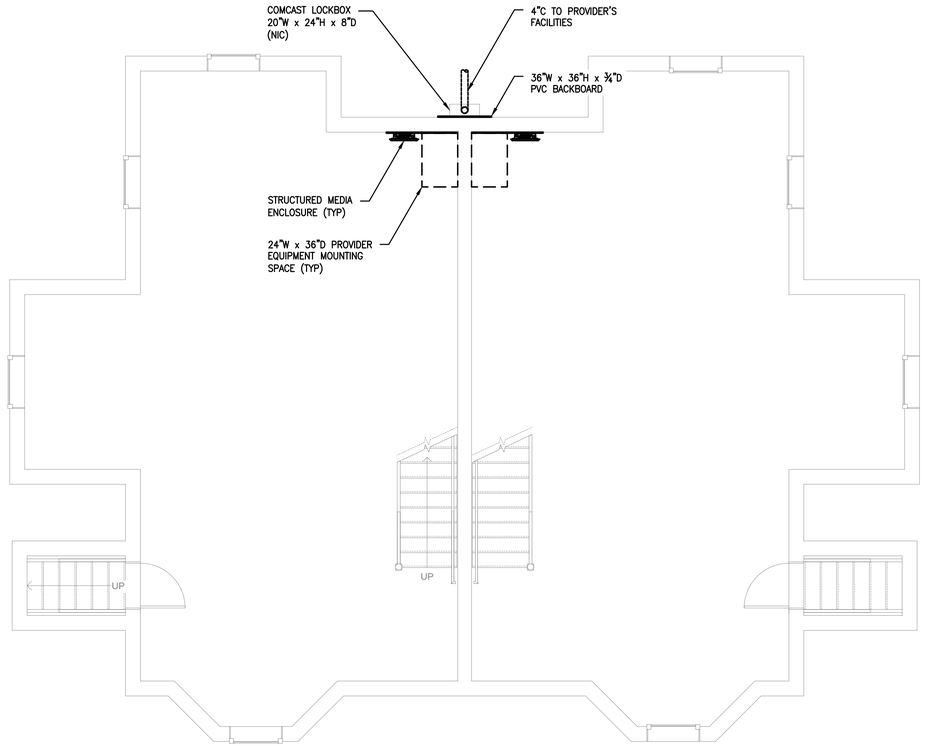

1 BASEMENT
SCALE: 1/4" = 1'–0"

Date issued:

07.15.19

WINSLOW ARCHITECTS INC

89 MASSACHUSETTS AVE.
ARLINGTON, MA 02474

P: 781 648.6600
F: 781 648.6601

www.winslowarchitects.com

Owner/Developer:

MEDFIELD GREEN LLC.

Project:

MEDFIELD GREEN

Drawing:

BUILDING C - BASEMENT & FIRST FLOOR PLANS TELE-COM

Revisions:

No.	Description	Date

Stamp:

ANY REPRODUCTION, POSSESSION OR USE OF THIS DRAWING WITHOUT THE WRITTEN PERMISSION OF WINSLOW ARCHITECTS INC. IS PROHIBITED. VIOLATORS WILL BE PROSECUTED TO THE FULL EXTENT OF THE LAW.

© 2019 WINSLOW ARCHITECTS, INC.

Project number:

16-515

Sheet:

T-C-100

7/15/2019 2:28 PM

WB&A
Wozny/Barbar & Associates, Inc.
CONSULTING ENGINEERS
1076 Washington Street
Hanover, MA 02339
Tel: (781) 826-4144
Fax: (781) 924-5792
www.wbengineers.com
161 Exchange Street
3rd Floor
Pawtucket, RI 02860

NOTES:

1. REFER TO DRAWING **T–001** FOR LEGEND, ABBREVIATIONS, GENERAL NOTES AND DETAILS.
2. ALL DWELLING UNIT STRUCTURED CABLING SHALL BE TERMINATED UPON HARDWARE LOCATED WITHIN LOCAL STRUCTURED MEDIA ENCLOSURE, SEE DETAIL 1 ON DRAWING **T–501**.

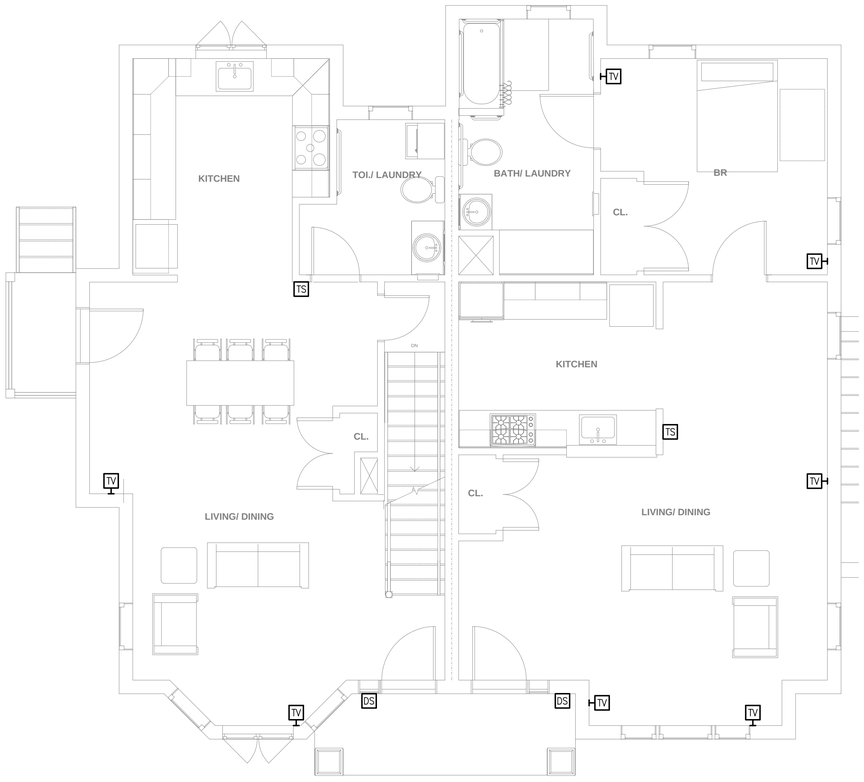

2 FIRST FLOOR
SCALE: 1/4" = 1'–0"

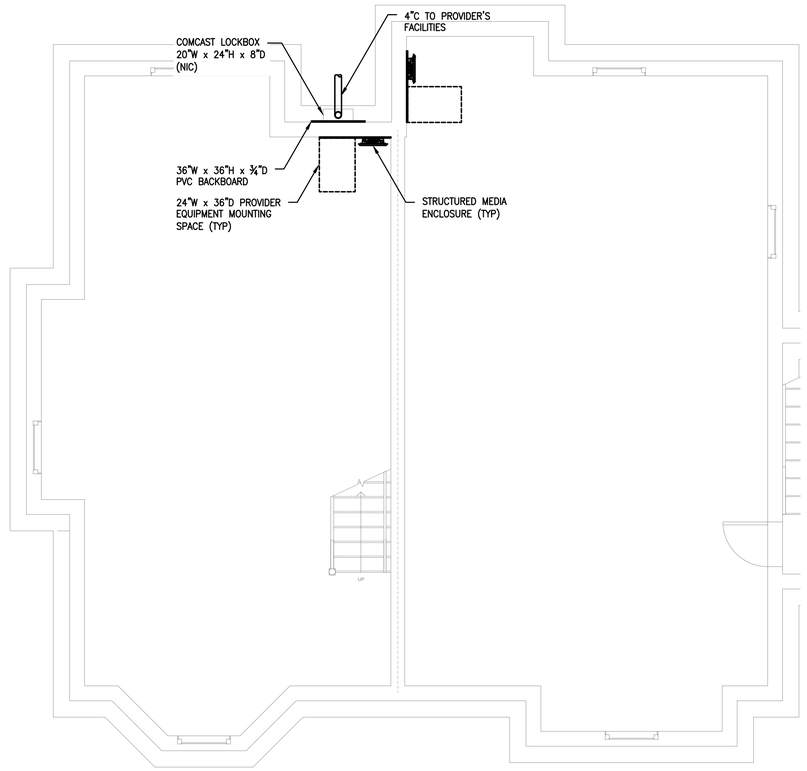

1 BASEMENT
SCALE: 1/4" = 1'–0"

Date issued:

07.15.19

WINSLOW
ARCHITECTS
INC

89 MASSACHUSETTS AVE.
ARLINGTON, MA 02474

P: 781 648.6600
F: 781 648.6601

www.winslowarchitects.com

Owner/Developer:

MEDFIELD
GREEN LLC.

Project:

MEDFIELD GREEN

Drawing:

BUILDING D -
BASEMENT &
FIRST FLOOR
PLANS
TELE-COM

Revisions:

No.	Description	Date

Stamp:

ANY REPRODUCTION, POSSESSION OR USE OF THIS DRAWING WITHOUT THE WRITTEN PERMISSION OF WINSLOW ARCHITECTS INC. IS PROHIBITED. VIOLATORS WILL BE PROSECUTED TO THE FULL EXTENT OF THE LAW.

© 2019 WINSLOW ARCHITECTS, INC.

Project number:

16-515

Sheet:

T-D-100

7/15/2019 2:46 PM

WB&A
Wozny/Barbar & Associates, Inc.
CONSULTING ENGINEERS
1076 Washington Street
Hanover, MA 02339
Tel: (781) 826-4144
Fax: (781) 924-5792
www.wbaengineers.com
161 Exchange Street
3rd Floor
Pawtucket, RI 02860

NOTES:

1. REFER TO DRAWING **T–001** FOR LEGEND, ABBREVIATIONS, GENERAL NOTES AND DETAILS.
2. ALL DWELLING UNIT STRUCTURED CABLING SHALL BE TERMINATED UPON HARDWARE LOCATED WITHIN LOCAL STRUCTURED MEDIA ENCLOSURE, SEE DETAIL 1 ON DRAWING **T–501**.

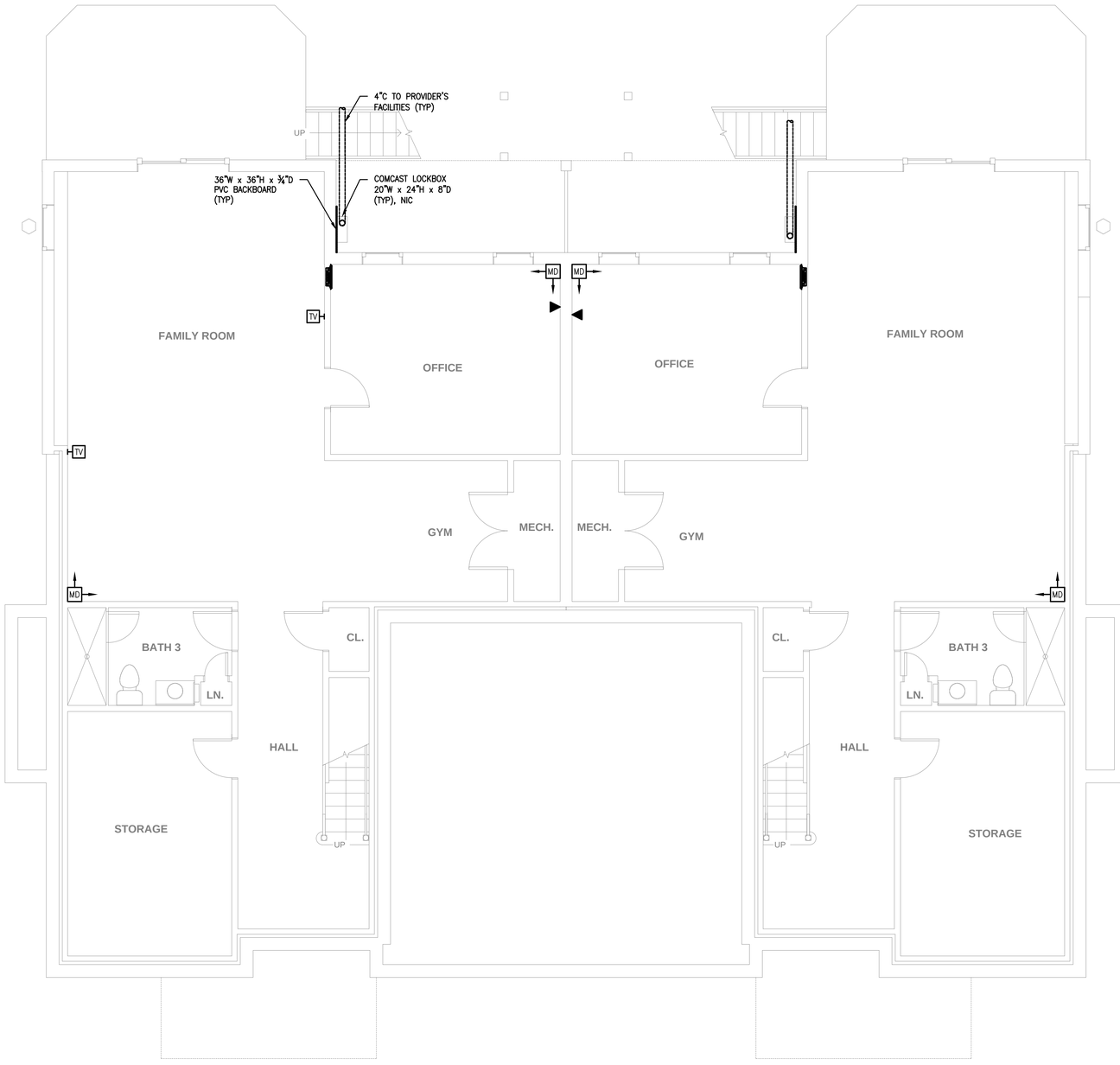

1 BASEMENT
SCALE: 1/4" = 1'-0"

Date issued:

07.15.19

WINSLOW ARCHITECTS INC

89 MASSACHUSETTS AVE.
ARLINGTON, MA 02474

P: 781 648.6600
F: 781 648.6601

www.winslowarchitects.com

Owner/Developer:

MEDFIELD GREEN LLC.

Project:

MEDFIELD GREEN

Drawing:

BUILDING E - BASEMENT PLAN TELE-COM

Revisions:

No.	Description	Date

Stamp:

ANY REPRODUCTION, POSSESSION OR USE OF THIS DRAWING WITHOUT THE WRITTEN PERMISSION OF WINSLOW ARCHITECTS INC. IS PROHIBITED. VIOLATORS WILL BE PROSECUTED TO THE FULL EXTENT OF THE LAW.

© 2019 WINSLOW ARCHITECTS, INC.

Project number:

16-515

Sheet:

T-E-100

7/15/2019 2:31 PM

WB&A
Wozny/Barbar & Associates, Inc.
CONSULTING ENGINEERS
1076 Washington Street
Hanover, MA 02339
Tel: (781) 826-4144
Fax: (781) 924-5792
www.wbaengineers.com
161 Exchange Street
3rd Floor
Pawtucket, RI 02860

NOTES:

1. REFER TO DRAWING **T–001** FOR LEGEND, ABBREVIATIONS, GENERAL NOTES AND DETAILS.
2. ALL DWELLING UNIT STRUCTURED CABLING SHALL BE TERMINATED UPON HARDWARE LOCATED WITHIN LOCAL STRUCTURED MEDIA ENCLOSURE, SEE DETAIL 1 ON DRAWING **T–501**.

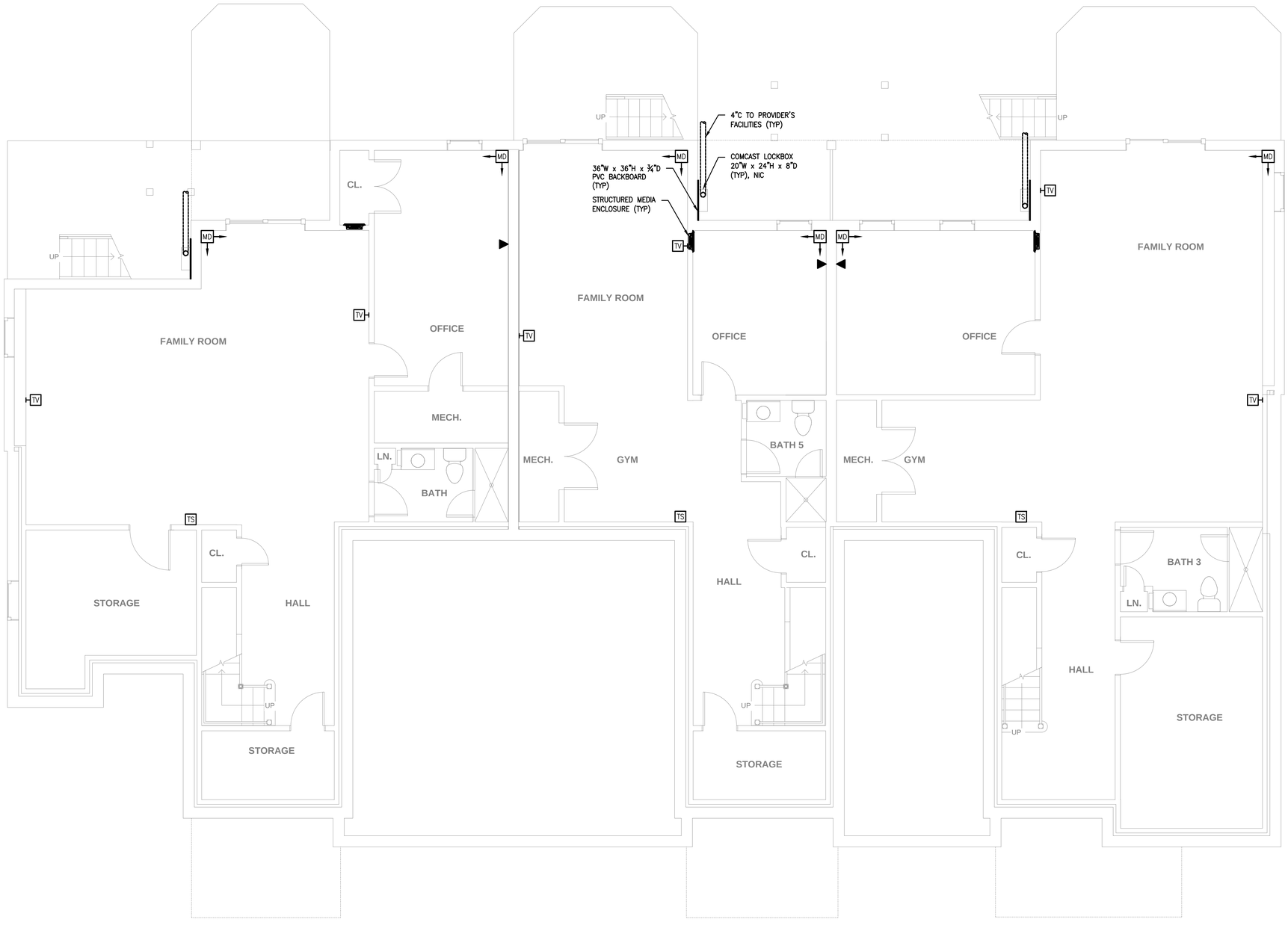

1 BASEMENT
SCALE: 1/4" = 1'–0"

Date issued:

07.15.19

WINSLOW ARCHITECTS INC

89 MASSACHUSETTS AVE.
ARLINGTON, MA 02474

P: 781 648.6600
F: 781 648.6601

www.winslowarchitects.com

Owner/Developer:

MEDFIELD GREEN LLC.

Project:

MEDFIELD GREEN

Drawing:

BUILDING F - BASEMENT PLAN TELE-COM

Revisions:

No.	Description	Date

Stamp:

ANY REPRODUCTION, POSSESSION OR USE OF THIS DRAWING WITHOUT THE WRITTEN PERMISSION OF WINSLOW ARCHITECTS INC. IS PROHIBITED. VIOLATORS WILL BE PROSECUTED TO THE FULL EXTENT OF THE LAW.

© 2019 WINSLOW ARCHITECTS, INC.

Project number:

16-515

Sheet:

T-F-100

7/15/2019 2:33 PM

WB&A
Wozny/Barbar & Associates, Inc.
CONSULTING ENGINEERS
1076 Washington Street
Hanover, MA 02339
Tel: (781) 826-4144
Fax: (781) 924-5792
www.wbaengineers.com
161 Exchange Street
3rd Floor
Pawtucket, RI 02860

NOTES:

1. REFER TO DRAWING **T–001** FOR LEGEND, ABBREVIATIONS, GENERAL NOTES AND DETAILS.
2. ALL DWELLING UNIT STRUCTURED CABLING SHALL BE TERMINATED UPON HARDWARE LOCATED WITHIN LOCAL STRUCTURED MEDIA ENCLOSURE, SEE DETAIL 1 ON DRAWING **T–501**.

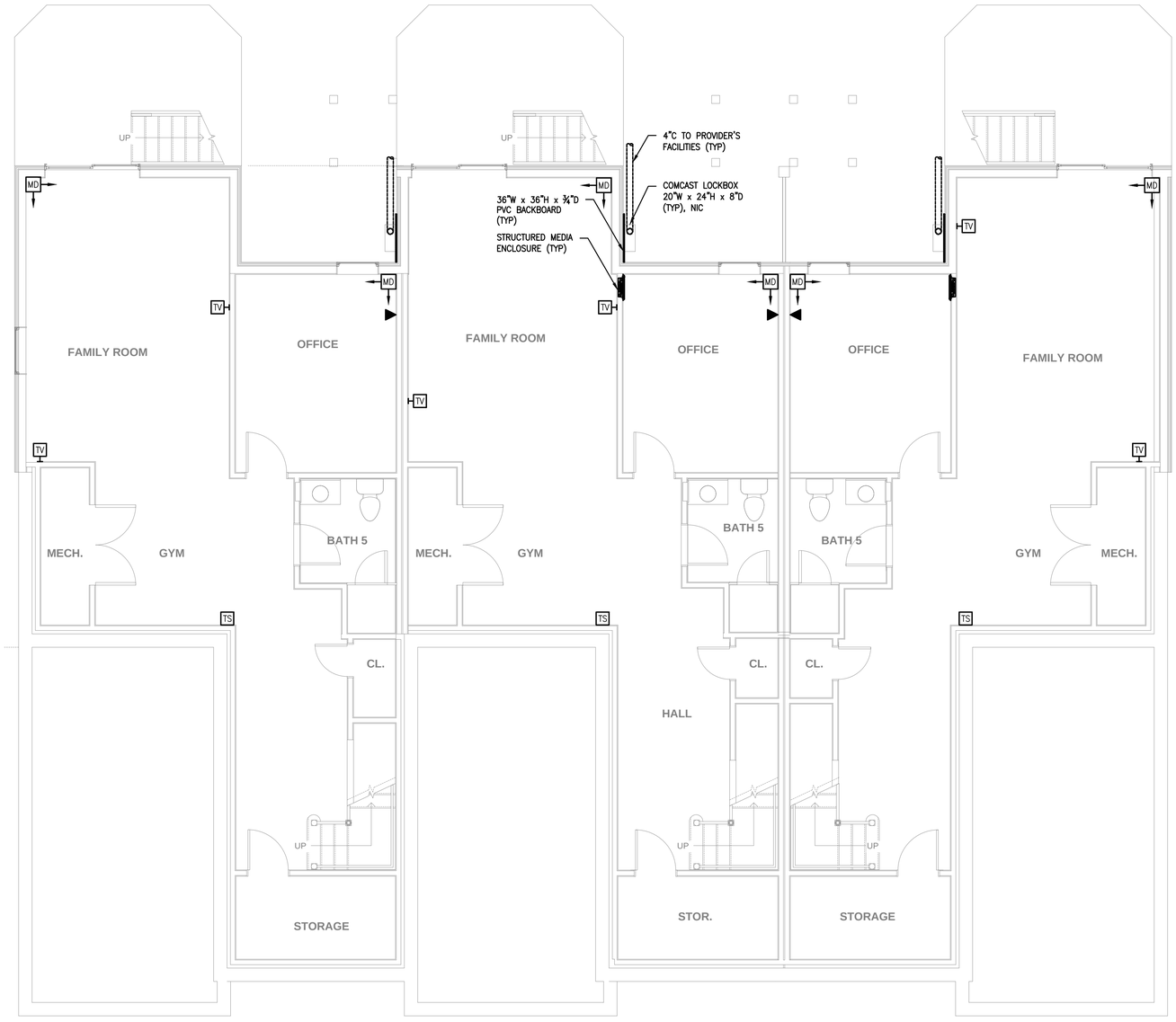

1 BASEMENT
SCALE: 1/4" = 1'–0"

Date issued:

07.15.19

WINSLOW ARCHITECTS INC

89 MASSACHUSETTS AVE.
ARLINGTON, MA 02474

P: 781 648.6600
F: 781 648.6601

www.winslowarchitects.com

Owner/Developer:

MEDFIELD GREEN LLC.

Project:

MEDFIELD GREEN

Drawing:

BUILDING G - BASEMENT FLOOR PLAN TELE-COM

Revisions:

No.	Description	Date

Stamp:

ANY REPRODUCTION, POSSESSION OR USE OF THIS DRAWING WITHOUT THE WRITTEN PERMISSION OF WINSLOW ARCHITECTS INC. IS PROHIBITED. VIOLATORS WILL BE PROSECUTED TO THE FULL EXTENT OF THE LAW.

© 2019 WINSLOW ARCHITECTS, INC.

Project number:

16-515

Sheet:

T-G-100

7/15/2019 2:35 PM

WB&A
Wozny/Barbar & Associates, Inc.
CONSULTING ENGINEERS
1076 Washington Street
Hanover, MA 02339
Tel: (781) 826-4144
Fax: (781) 924-5792
www.wbengineers.com
161 Exchange Street
3rd Floor
Pawtucket, RI 02860

NOTES:

1. REFER TO DRAWING **T–001** FOR LEGEND, ABBREVIATIONS, GENERAL NOTES AND DETAILS.
2. ALL DWELLING UNIT STRUCTURED CABLING SHALL BE TERMINATED UPON HARDWARE LOCATED WITHIN LOCAL STRUCTURED MEDIA ENCLOSURE, SEE DETAIL 1 ON DRAWING **T–501**.

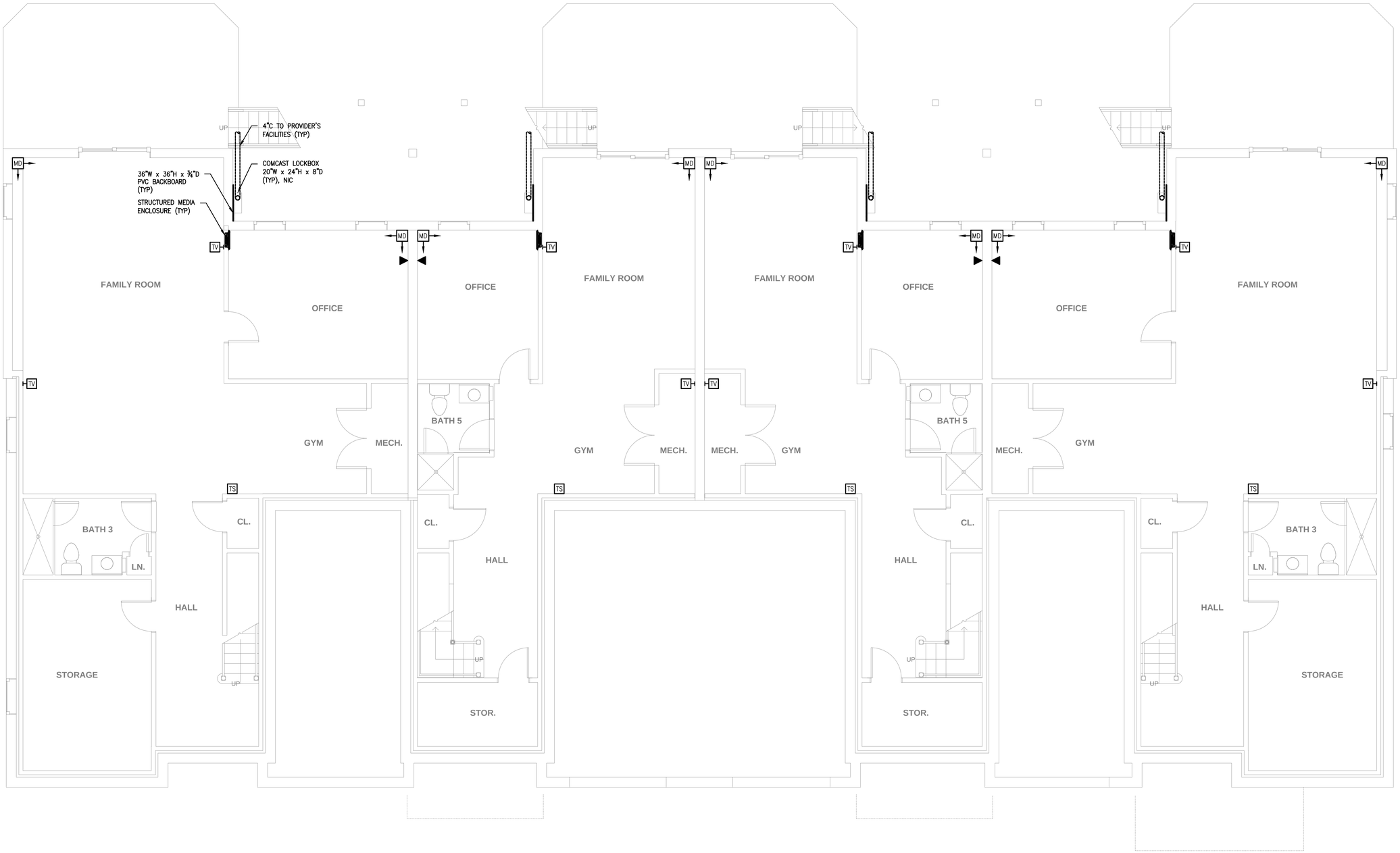

1 BASEMENT
SCALE: 1/4" = 1'-0"

WINSLOW ARCHITECTS INC

89 MASSACHUSETTS AVE.
ARLINGTON, MA 02474

P: 781 648.6600
F: 781 648.6601

www.winslowarchitects.com

Date issued:

07.15.19

Owner/Developer:

MEDFIELD GREEN LLC.

Project:

MEDFIELD GREEN

Drawing:

BUILDING H - BASEMENT PLAN TELE-COM

Revisions:

No.	Description	Date

Stamp:

ANY REPRODUCTION, POSSESSION OR USE OF THIS DRAWING WITHOUT THE WRITTEN PERMISSION OF WINSLOW ARCHITECTS INC. IS PROHIBITED. VIOLATORS WILL BE PROSECUTED TO THE FULL EXTENT OF THE LAW.

© 2019 WINSLOW ARCHITECTS, INC.

Project number:

16-515

Sheet:

T-H-100

7/15/2019 2:37 PM

WB&A
Wozny/Barbar & Associates, Inc.
CONSULTING ENGINEERS
1076 Washington Street
Hanover, MA 02339
Tel: (781) 826-4144
Fax: (781) 924-5792
www.wbengineers.com
161 Exchange Street
3rd Floor
Pawtucket, RI 02860

NOTES:
1. PART NUMBERS REFER TO PRODUCTS OF ABB LOW VOLTAGE SYSTEMS, BASIS OF DESIGN.
2. ALL WIRING SHOWN IS 2-CONDUCTOR.
3. 12-18V DC DOOR STRIKES CAN BE POWERED, AND CONTROLLED DIRECTLY FROM THE OUTDOOR STATION.
4. DOOR STRIKE NOT TO EXCEED 250mA HOLDING.
5. INDEPENDENTLY POWERED DOOR STRIKES CAN BE CONTROLLED VIA FORM C CONTACTS IN OUTDOOR STATION.
6. M2300 UNIT REQUIRE CONNECTIVITY TO 110V AC.
7. IP GATEWAY (83342-500) SHALL BE WIRED TO STRUCTURED MEDIA ENCLOSURE WITHIN DWELLING UNIT.

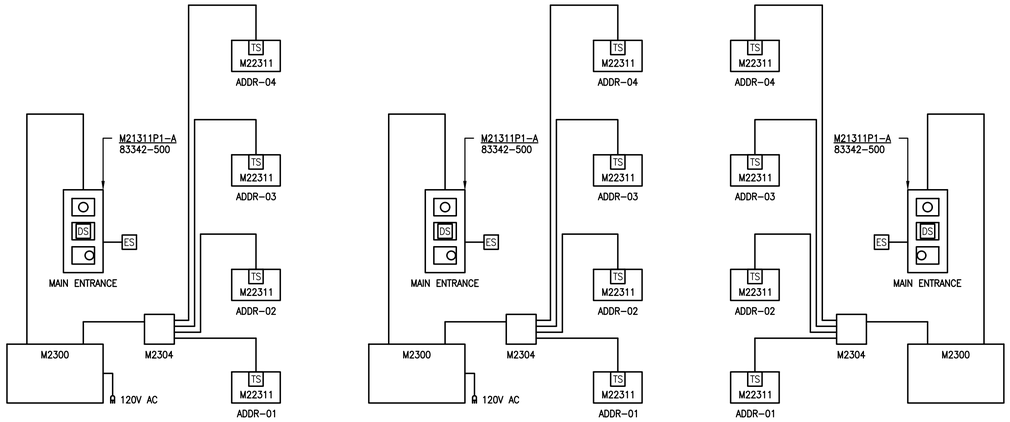

6 BUILDING 'G' ENTRY SYSTEM RISER
SCALE: NONE

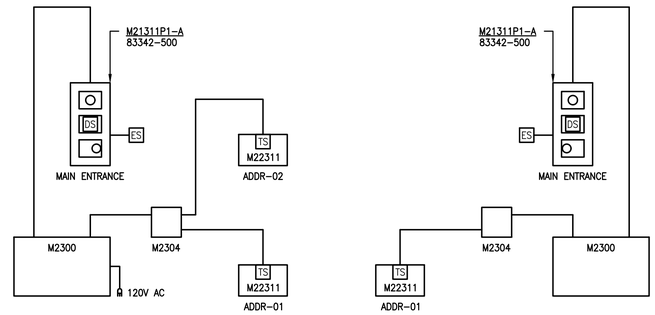

3 BUILDING 'D' ENTRY SYSTEM RISER
SCALE: NONE

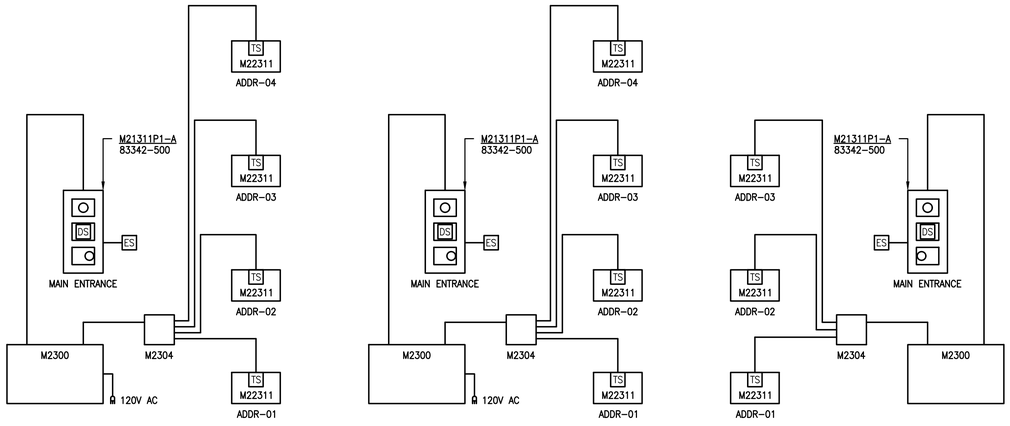

5 BUILDING 'F' ENTRY SYSTEM RISER
SCALE: NONE

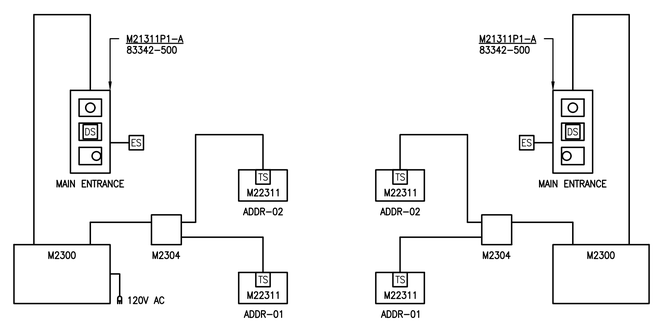

2 BUILDING 'C' ENTRY SYSTEM RISER
SCALE: NONE

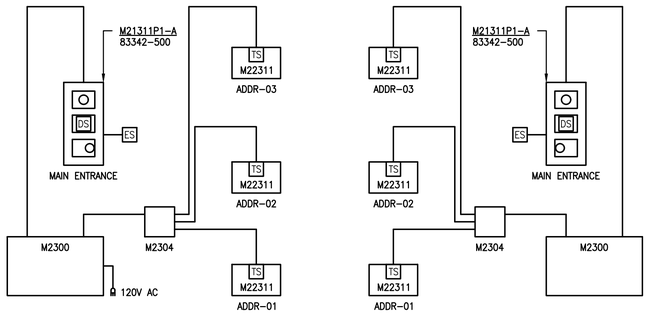

4 BUILDING 'E' ENTRY SYSTEM RISER
SCALE: NONE

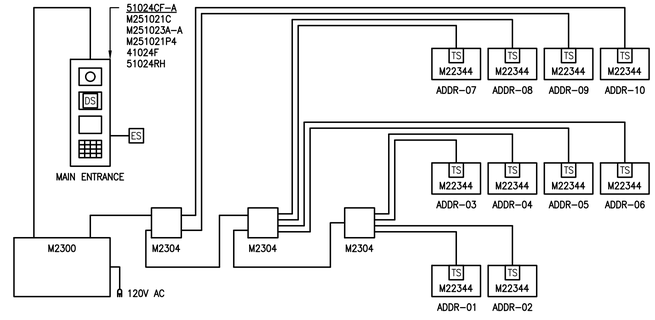

1 BUILDING 'A+B' ENTRY SYSTEM RISER
SCALE: NONE

Date issued:

07.15.19

WINSLOW ARCHITECTS INC

89 MASSACHUSETTS AVE.
ARLINGTON, MA 02474

P: 781 648.6600
F: 781 648.6601

www.winslowarchitects.com

Owner/Developer:

MEDFIELD GREEN LLC.

Project:

MEDFIELD GREEN

Drawing:

SCHEMATIC DIAGRAMS TELE-COM

Revisions:

No.	Description	Date

Stamp:

ANY REPRODUCTION, POSSESSION OR USE OF THIS DRAWING WITHOUT THE WRITTEN PERMISSION OF WINSLOW ARCHITECTS INC. IS PROHIBITED. VIOLATORS WILL BE PROSECUTED TO THE FULL EXTENT OF THE LAW.

© 2019 WINSLOW ARCHITECTS, INC.

Project number:

16-515

Sheet:

T-601

6/21/2019 12:12 PM

FIRE PROTECTION LEGEND

SPRINKLER HEADS

SYMBOL	DESCRIPTION
	SIDEWALL SPRINKLER
D	DRY SIDEWALL SPRINKLER
DEC	DRY EXTENDED COVERAGE SIDEWALL SPRINKLER
	CONCEALED PENDENT SPRINKLER
D	DRY CONCEALED PENDENT SPRINKLER
	UPRIGHT SPRINKLER
D	DRY UPRIGHT SPRINKLER
	SEMI-RECESSED SPRINKLER
D	DRY SEMI-RECESSED SPRINKLER
D D D D D D	SPRINKLERS EXISTING TO REMAIN (VARIOUS TYPES)
D D D D D D	EXISTING TO BE REMOVED (VARIOUS TYPES)

PIPES

SYMBOL	ABBREVIATION	DESCRIPTION
S		CONTINUATION MARK
		TEE LOOKING DOWN
		CAP OR END OF PIPE
		ELBOW UP OR RISER
		ELBOW DOWN OR DROP
F	F	UNDERGROUND FIRE SERVICE PIPING
D	D	DRY SPRINKLER PIPING
	DR	SPRINKLER DRAIN
SP	SP	SUPPLY PIPING
STP	STP	STANDPIPE
	WS	WET SPRINKLER PIPING
FDC	FDC	FIRE DEPARTMENT CONNECTION PIPING
		EXISTING TO BE REMOVED (PIPING)

GENERAL NOTES

1. THE WORK COVERED CONSISTS OF FURNISHING ALL LABOR AND MATERIALS NECESSARY TO INSTALL, COMPLETE AND READY THE FIRE PROTECTION SYSTEM FOR CONTINUOUS OPERATION.
2. ALL EQUIPMENT AND MATERIALS FURNISHED UNDER THE FIRE PROTECTION SUB-CONTRACT, LABOR AND TESTING PERFORMED HEREIN SHALL BE IN COMPLETE ACCORDANCE WITH THE MASSACHUSETTS STATE BUILDING CODE, THE LOCAL AUTHORITIES, THE NATIONAL FIRE PROTECTION ASSOCIATION AND INSURANCE REGULATIONS AND REQUIREMENTS GOVERNING SUCH WORK.
3. ANY AND ALL PERMITS REQUIRED FOR INSTALLATION OF ANY MATERIAL SHALL BE OBTAINED AS PART OF THE SPECIFICATIONS INCLUDING ALL FEES OR EXPENSES INCURRED.
4. SPRINKLER DENSITY AND AREA OF APPLICATION SHALL BE IN ACCORDANCE WITH NFPA 13-2013.
5. THE SPRINKLER CONTRACTOR SHALL PREPARE WORKING DRAWINGS OF THE SPRINKLER WORK AND OBTAIN APPROVALS FROM THE MEDFIELD FIRE DEPARTMENT PRIOR TO INSTALLATION.
6. ROUTING OF SPRINKLER MAINS, BRANCHES AND HEADS SHALL BE THOROUGHLY COORDINATED WITH THE OTHER TRADES AND BUILDING STRUCTURE PRIOR TO SUBMISSION OF COORDINATED SHOP DRAWINGS.
7. PAY ALL FEES ASSOCIATED WITH ALL FIRE PROTECTION AND FIRE ALARM DEACTIVATIONS AND REACTIVATIONS.
8. SUBMIT TO THE ENGINEER FOR APPROVAL STAMPED AND SIGNED SPRINKLER FABRICATION DRAWINGS PRIOR TO THE START OF WORK.
9. THE DESIGN DRAWINGS INDICATE SPRINKLERS IN TYPICAL DWELLING UNITS AND THE HYDRAULICALLY MOST REMOTE AREAS ONLY. SPRINKLER CONTRACTOR SHALL PROVIDE SHOP DRAWINGS INDICATION ALL REQUIRED SPRINKLERS IN ACCORDANCE WITH NFPA REQUIREMENTS AND DESIGN CRITERIA PROVIDED.
10. SPRINKLER CONTRACTOR MUST DESIGN SPRINKLER SYSTEM TO CONFORM TO ALL OBSTRUCTION AS PER NFPA 13 CHAPTER 8.
11. SPRINKLER CONTRACTOR MUST SUBMIT CO-ORDINATION DRAWINGS TO WB&A FOR REVIEW AND APPROVAL PRIOR TO BEGINNING OF CONSTRUCTION.
12. ALL DRY SPRINKLERS ATTACHED TO A WET SPRINKLER SYSTEM TO BE CONNECTED VIA A METAL TEE AS WELL AS HAVING A MINIMUM 6" OF DRY BARREL IN THE CONDITIONED SPACE.
13. HYDRANT FLOW TEST DATA:

1. STREET	XXXXXX
2. DATE	XXXXXX
3. MAIN SIZE	XXXXXX
4. STATIC PRESSURE	XXXXXX
5. RESIDUAL PRESSURE	XXXXXX
6. PITOT PRESSURE	XXXXXX
7. FLOW	XXXXXX
8. FLOW COEFFICIENT	XXXXXX
9. FLOW @ 20 PSI	XXXXXX

VALVES & GAUGES

SYMBOL	ABBREVIATION	DESCRIPTION
	FDC	RECESSED FIRE DEPARTMENT INLET CONNECTION
	DCVA	DOUBLE CHECK VALVE ASSEMBLY
	FCVA	FLOOR CONTROL VALVE ASSEMBLY
	SOV	SHUT-OFF VALVE W/ TAMPER SWITCH
	WPV	WET PIPE VALVE
	DPV	DRY PIPE VALVE
		CHECK VALVE
		PRESSURE GAUGE
	FS	FLOW SWITCH
	PS	PRESSURE SWITCH
		ELECTRIC FIRE BELL
		BALL VALVE
		ROOF HYDRANT
	FDV	FIRE DEPARTMENT VALVE
	PIV	POST INDICATING VALVE W/ BOWL DRIP

MISC.

SYMBOL	ABBREVIATION	DESCRIPTION
	TS	TAMPER SWITCH
	NTS	NOT TO SCALE
#		HYDRAULIC NODE POINTS (SPRINKLER)
#		HYDRAULIC NODE POINTS (PIPING)
	CTE	CONNECT TO EXISTING

NOT ALL SYMBOLS MAY BE USED

WB&A
Wozny/Barbar & Associates, Inc.
CONSULTING ENGINEERS
1076 Washington Street, Hanover, MA 02339, Tel: (781) 826-4144, Fax: (781) 924-5792
161 Exchange Street, 3rd Floor, Pawtucket, RI 02860
www.wbaengineers.com

Date issued:

07.15.19

WINSLOW ARCHITECTS INC
89 MASSACHUSETTS AVE.
ARLINGTON, MA 02474
P: 781 648.6600
F: 781 648.6601
www.winslowarchitects.com

Owner/Developer:

MEDFIELD GREEN LLC.

Project:

MEDFIELD GREEN

Drawing:

FIRE PROTECITON LEGEND & NOTES

Revisions:

No.	Description	Date

Stamp:

ANY REPRODUCTION, POSSESSION OR USE OF THIS DRAWING WITHOUT THE WRITTEN PERMISSION OF WINSLOW ARCHITECTS INC. IS PROHIBITED. VIOLATORS WILL BE PROSECUTED TO THE FULL EXTENT OF THE LAW.

© 2019 WINSLOW ARCHITECTS, INC.

Project number:

16-515

Sheet:

F-000

7/17/2019 10:38 AM

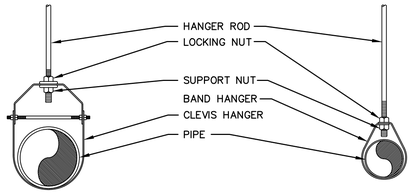

3 INCH AND LARGER

2 1/2" AND SMALLER

HANGER ROD SCHEDULE	
PIPE SIZE	ROD SIZE
UP TO 2"	3/8" DIA.
2 1/2" & 3"	1/2" DIA.
4" AND 5"	5/8"
6" – 8"	3/4"
10 & 12"	7/8"

HANGER ROD SPACING	
PIPE SIZE	MAX. ALLOWABLE SPACING
1"	7'
1 1/4"	8'
1 1/2"	9'
2"	10'
2 1/2"	11'
3" – 12"	12'

FIRE PROTECTION SYSTEMS

X CLEVIS–BAND HANGER & ROD INSTALLATION DETAIL & SCHEDULE
NOT TO SCALE

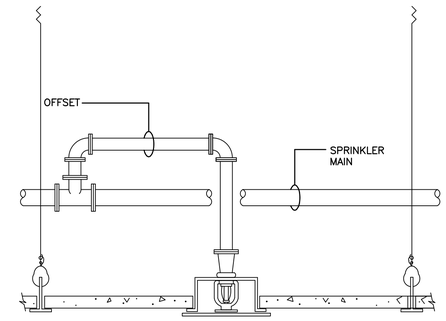

X CONCEALED PENDANT SPRINKLER
NOT TO SCALE

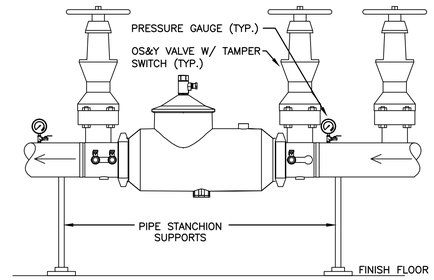

NOTES:
1. TAMPER SWITCH SHALL BE FURNISHED AND INSTALLED BY THE FIRE PROTECTION CONTRACTOR AND WIRED BY OTHERS
2. PROVIDE 3' CLEARANCE IN FRONT OF DOUBLE CHECK VALVE AND 12" FROM WALL
3. DOUBLE CHECK VALVE ASSEMBLY SHALL BE APOLLO DCLF 4A OR APPROVED EQUAL

X DOUBLE CHECK VALVE ASSEMBLY
NOT TO SCALE

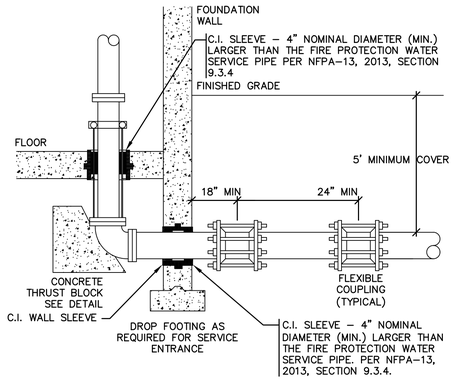

X THROUGH FLOOR SERVICE
NOT TO SCALE

PIPE / FITTINGS	4	6	8
DEADENDS & TEES	1.50	2.60	4.50
90°	1.70	3.60	6.30
45°	1.00	2.00	3.30
22–1/2 °	0.50	1.00	1.60

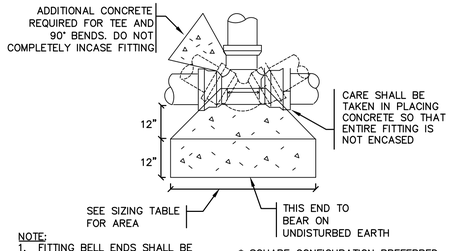

NOTE:
1. FITTING BELL ENDS SHALL BE KEPT FREE OF CONCRETE.
2. WHERE ADEQUATE BEARING CAN NOT BE OBTAINED PROVIDE TIE RODS IN LIEU OF THRUST BLOCKS.

* SQUARE CONFIGURATION PREFERRED HOWEVER AT CONTRACTOR'S OPTION, PROVIDE RECTANGULAR THRUST BLOCK OF EQUAL CROSS SECTIONAL AREA

X THRUST BLOCK
NOT TO SCALE

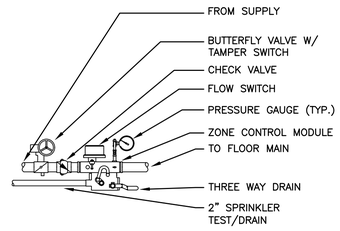

X SPRINKLER RISER W/ FLOOR CONTROL VALVE ASSEMBLY
NOT TO SCALE

WB&A
Wozny/Barbar & Associates, Inc.
CONSULTING ENGINEERS
1076 Washington Street
Hanover, MA 02339
Tel: (781) 826-4144
Fax: (781) 924-5792
www.wbassociates.com
161 Exchange Street
3rd Floor
Pawtucket, RI 02860

Date issued:

07.15.19

WINSLOW ARCHITECTS INC
89 MASSACHUSETTS AVE.
ARLINGTON, MA 02474
P: 781 648.6600
F: 781 648.6601
www.winslowarchitects.com

Owner/Developer:

MEDFIELD GREEN LLC.

Project:

MEDFIELD GREEN

Drawing:

FIRE PROTECITON LEGEND & NOTES

Revisions:

No.	Description	Date

Stamp:

ANY REPRODUCTION, POSSESSION OR USE OF THIS DRAWING WITHOUT THE WRITTEN PERMISSION OF WINSLOW ARCHITECTS INC. IS PROHIBITED. VIOLATORS WILL BE PROSECUTED TO THE FULL EXTENT OF THE LAW.

© 2019 WINSLOW ARCHITECTS, INC.

Project number:

16-515

Sheet:

F-001

7/17/2019 10:38 AM

NOTES:

1. THIS FLOOR SHALL BE FULLY SPRINKLERED BASED ON NFPA 13–2013 CRITERIA
2. SPRINKLER CONTRACTOR IS TO DEVELOP COMPLETE SPRINKLER LAYOUT PER NFPA 13–2013
3. SPRINKLERS THROUGHOUT SHALL BE RESIDENTIAL TYPE.
4. PROVIDE COMPLETE SPRINKLER PROTECTION WITHIN COMBUSTIBLE CONCEALED SPACES ABOVE ALL CEILINGS THROUGHOUT USING SPRINKLERS LISTED FOR COMBUSTIBLE, CONCEALED SPACES W/ DRAFT CURTAINS EVERY 1000 SQ. FT. BY GC. SPRINKLER SPACING SHALL NOT EXCEED 12' X 12'.
5. PROVIDE COMPLETE SPRINKLER PROTECTION WITHIN COMBUSTIBLE CONCEALED SPACES BEHIND WALLS MORE THAN 6" WIDE. PROVIDE COMPLETE SPRINKLER PROTECTION WITHIN ALL VERTICAL PIPE CHASES CONTAINING PLASTIC PIPING OR SOURCE OF IGNITION REGARDLESS OF SIZE.
6. DRY SPRINKLER BARRELS SHALL EXTEND A MINIMUM OF 6" INTO CONDITIONED SPACE.

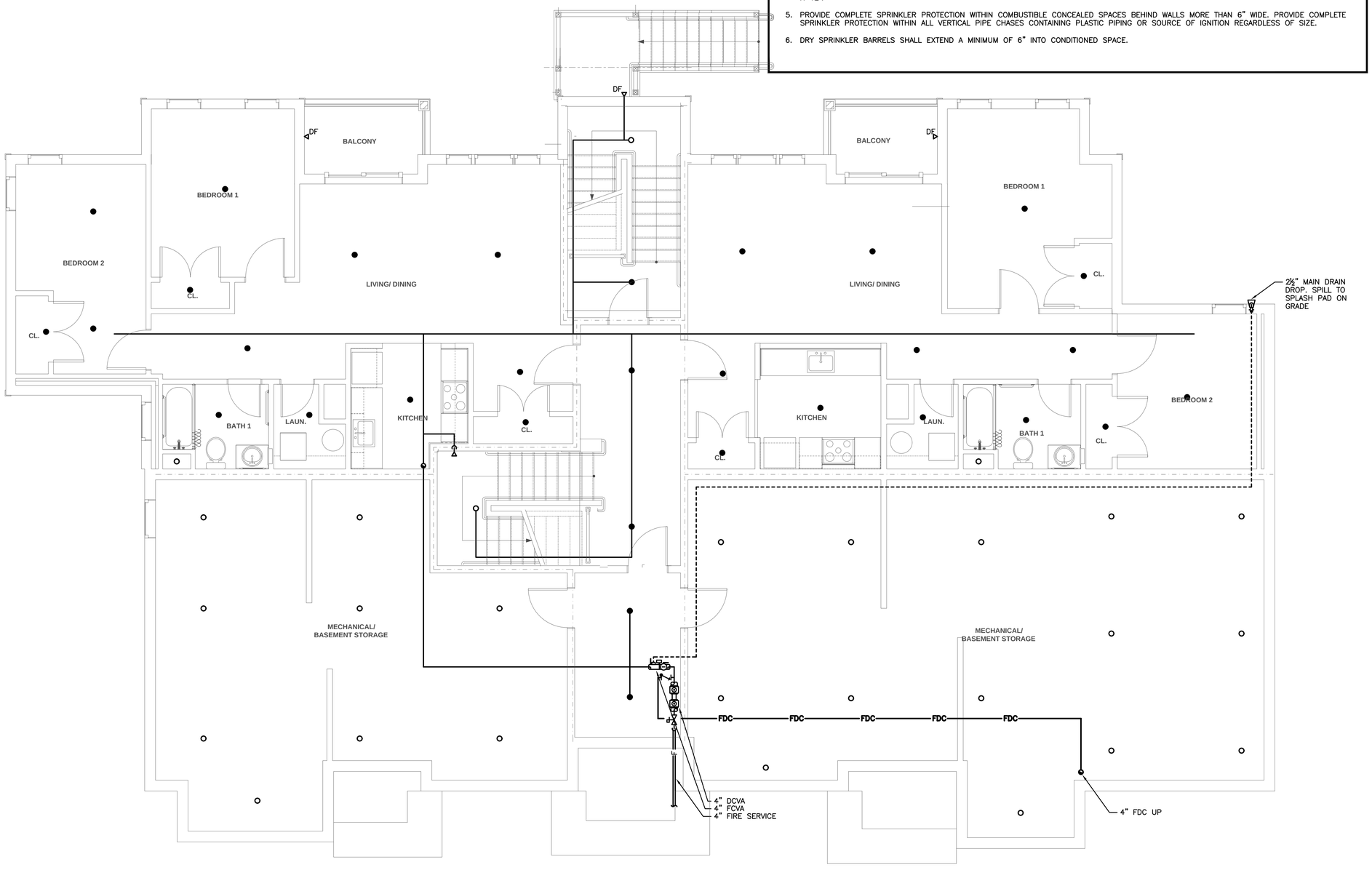

WB&A
Wozny/Barbar & Associates, Inc.
CONSULTING ENGINEERS
1076 Washington Street
Hanover, MA 02339
Tel: (781) 826-4144
Fax: (781) 924-5792
www.wbaengineers.com
161 Exchange Street
3rd Floor
Pawtucket, RI 02860

Date issued:

07.15.19

WINSLOW ARCHITECTS INC

89 MASSACHUSETTS AVE.
ARLINGTON, MA 02474

P: 781 648.6600
F: 781 648.6601

www.winslowarchitects.com

Owner/Developer:

MEDFIELD GREEN LLC.

Project:

MEDFIELD GREEN

Drawing:

FIRE PROTECITON BUILDINGS A+B BASEMENT

Revisions:

No.	Description	Date

Stamp:

ANY REPRODUCTION, POSSESSION OR USE OF THIS DRAWING WITHOUT THE WRITTEN PERMISSION OF WINSLOW ARCHITECTS INC. IS PROHIBITED. VIOLATORS WILL BE PROSECUTED TO THE FULL EXTENT OF THE LAW.

© 2019 WINSLOW ARCHITECTS, INC.

Project number:

16-515

Sheet:

F-AB-100

7/17/2019 10:38 AM

NOTES:

1. THIS FLOOR SHALL BE FULLY SPRINKLERED BASED ON NFPA 13-2013 CRITERIA
2. SPRINKLER CONTRACTOR IS TO DEVELOP COMPLETE SPRINKLER LAYOUT PER NFPA 13-2013
3. SPRINKLERS THROUGHOUT SHALL BE RESIDENTIAL TYPE.
4. PROVIDE COMPLETE SPRINKLER PROTECTION WITHIN COMBUSTIBLE CONCEALED SPACES ABOVE ALL CEILINGS THROUGHOUT USING SPRINKLERS LISTED FOR COMBUSTIBLE, CONCEALED SPACES W/ DRAFT CURTAINS EVERY 1000 SQ. FT. BY GC. SPRINKLER SPACING SHALL NOT EXCEED 12' X 12'.
5. PROVIDE COMPLETE SPRINKLER PROTECTION WITHIN COMBUSTIBLE CONCEALED SPACES BEHIND WALLS MORE THAN 6" WIDE. PROVIDE COMPLETE SPRINKLER PROTECTION WITHIN ALL VERTICAL PIPE CHASES CONTAINING PLASTIC PIPING OR SOURCE OF IGNITION REGARDLESS OF SIZE.
6. DRY SPRINKLER BARRELS SHALL EXTEND A MINIMUM OF 6" INTO CONDITIONED SPACE.

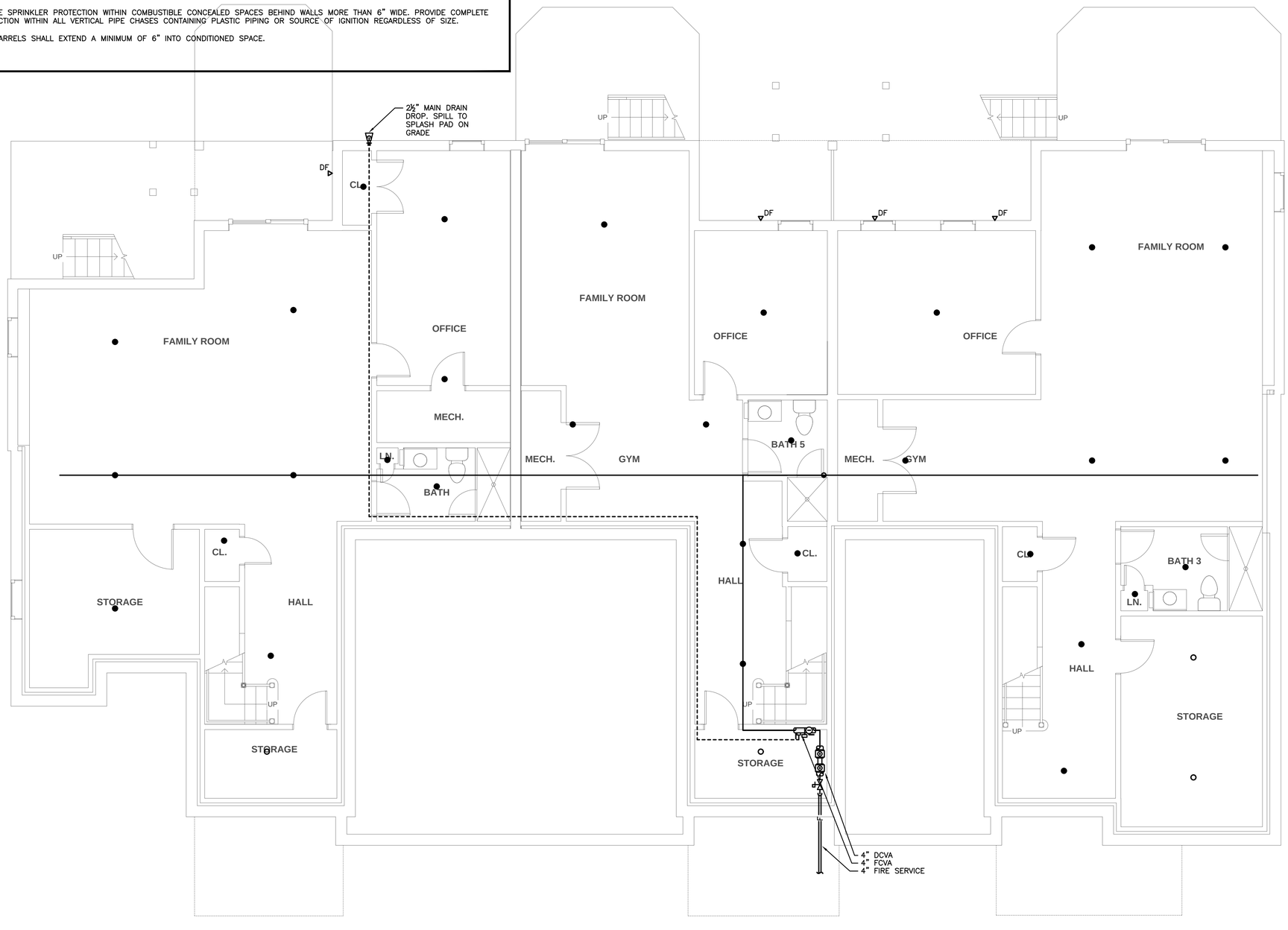

WB&A
Wozny/Barbar & Associates, Inc.
CONSULTING ENGINEERS
1076 Washington Street
Hanover, MA 02339
Tel: (781) 826-4144
Fax: (781) 924-5792
www.wbengineers.com
161 Exchange Street
3rd Floor
Pawtucket, RI 02860

Date issued:

07.15.19

WINSLOW ARCHITECTS INC

89 MASSACHUSETTS AVE.
ARLINGTON, MA 02474

P: 781 648.6600
F: 781 648.6601

www.winslowarchitects.com

Owner/Developer:

MEDFIELD GREEN LLC.

Project:

MEDFIELD GREEN

Drawing:

FIRE PROTECITON BUILDING F BASEMENT PLAN

Revisions:

No.	Description	Date

Stamp:

ANY REPRODUCTION, POSSESSION OR USE OF THIS DRAWING WITHOUT THE WRITTEN PERMISSION OF WINSLOW ARCHITECTS INC. IS PROHIBITED. VIOLATORS WILL BE PROSECUTED TO THE FULL EXTENT OF THE LAW.

© 2019 WINSLOW ARCHITECTS, INC.

Project number:

16-515

Sheet:

F-F-100

7/17/2019 10:38 AM

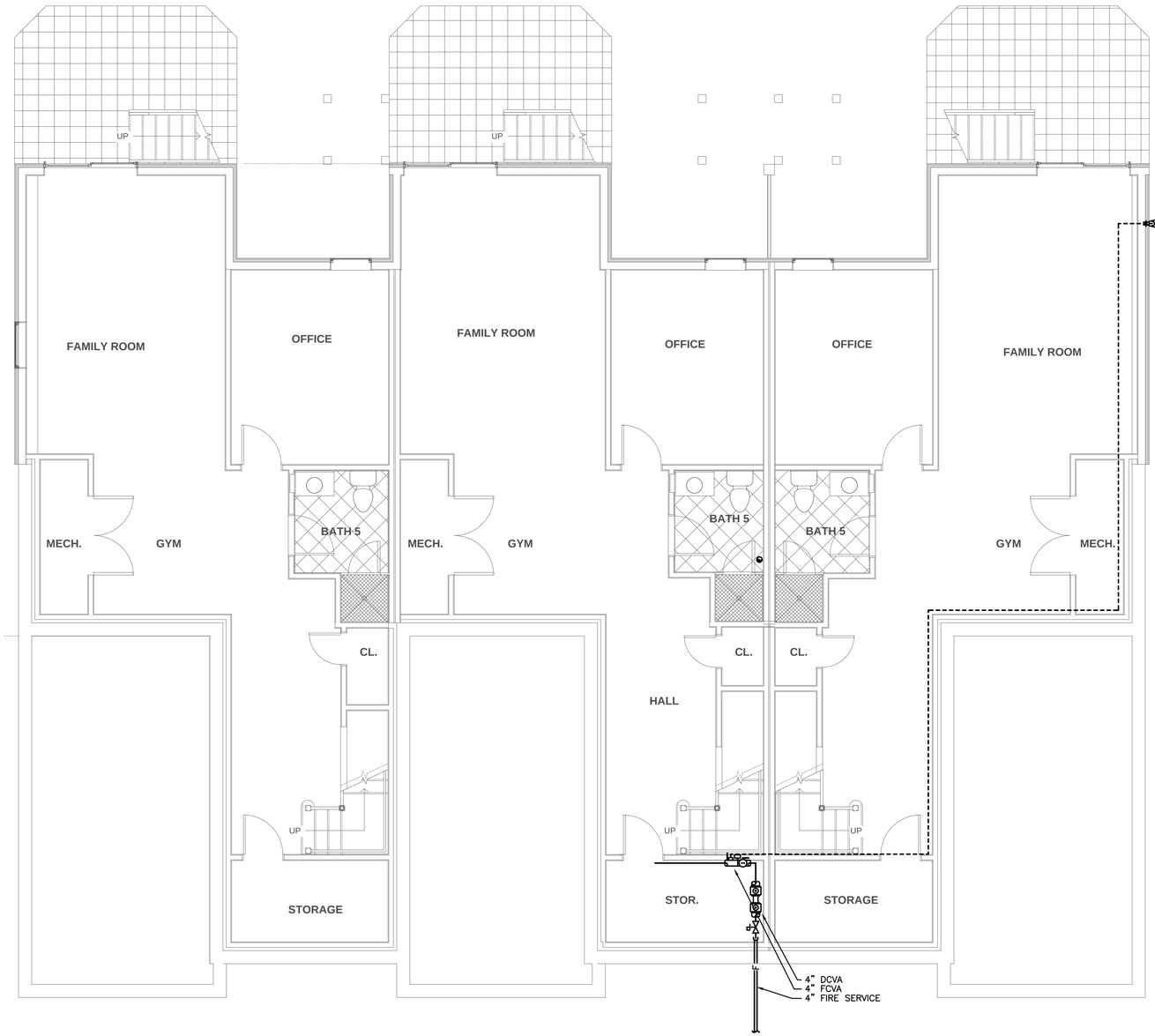

NOTES:

1. THIS FLOOR SHALL BE FULLY SPRINKLERED BASED ON NFPA 13–2013 CRITERIA
2. SPRINKLER CONTRACTOR IS TO DEVELOP COMPLETE SPRINKLER LAYOUT PER NFPA 13–2013
3. SPRINKLERS THROUGHOUT SHALL BE RESIDENTIAL TYPE.
4. PROVIDE COMPLETE SPRINKLER PROTECTION WITHIN COMBUSTIBLE CONCEALED SPACES ABOVE ALL CEILINGS THROUGHOUT USING SPRINKLERS LISTED FOR COMBUSTIBLE, CONCEALED SPACES W/ DRAFT CURTAINS EVERY 1000 SQ. FT. BY GC. SPRINKLER SPACING SHALL NOT EXCEED 12' X 12'.
5. PROVIDE COMPLETE SPRINKLER PROTECTION WITHIN COMBUSTIBLE CONCEALED SPACES BEHIND WALLS MORE THAN 6" WIDE. PROVIDE COMPLETE SPRINKLER PROTECTION WITHIN ALL VERTICAL PIPE CHASES CONTAINING PLASTIC PIPING OR SOURCE OF IGNITION REGARDLESS OF SIZE.
6. DRY SPRINKLER BARRELS SHALL EXTEND A MINIMUM OF 6" INTO CONDITIONED SPACE.

WB&A
Wozny/Barbar & Associates, Inc.
CONSULTING ENGINEERS
1076 Washington Street
Hanover, MA 02339
Tel: (781) 826-4144
Fax: (781) 924-5792
www.wbaengineers.com
161 Exchange Street
3rd Floor
Pawtucket, RI 02860

Date issued:

07.15.19

WINSLOW ARCHITECTS INC

89 MASSACHUSETTS AVE.
ARLINGTON, MA 02474

P: 781 648.6600
F: 781 648.6601

www.winslowarchitects.com

Owner/Developer:

MEDFIELD GREEN LLC.

Project:

MEDFIELD GREEN

Drawing:

FIRE PROTECITON BUILDING G BASEMENT PLAN

Revisions:

No.	Description	Date

Stamp:

ANY REPRODUCTION, POSSESSION OR USE OF THIS DRAWING WITHOUT THE WRITTEN PERMISSION OF WINSLOW ARCHITECTS INC. IS PROHIBITED. VIOLATORS WILL BE PROSECUTED TO THE FULL EXTENT OF THE LAW.

© 2019 WINSLOW ARCHITECTS, INC.

Project number:

16-515

Sheet:

F-G-100

7/17/2019 10:38 AM

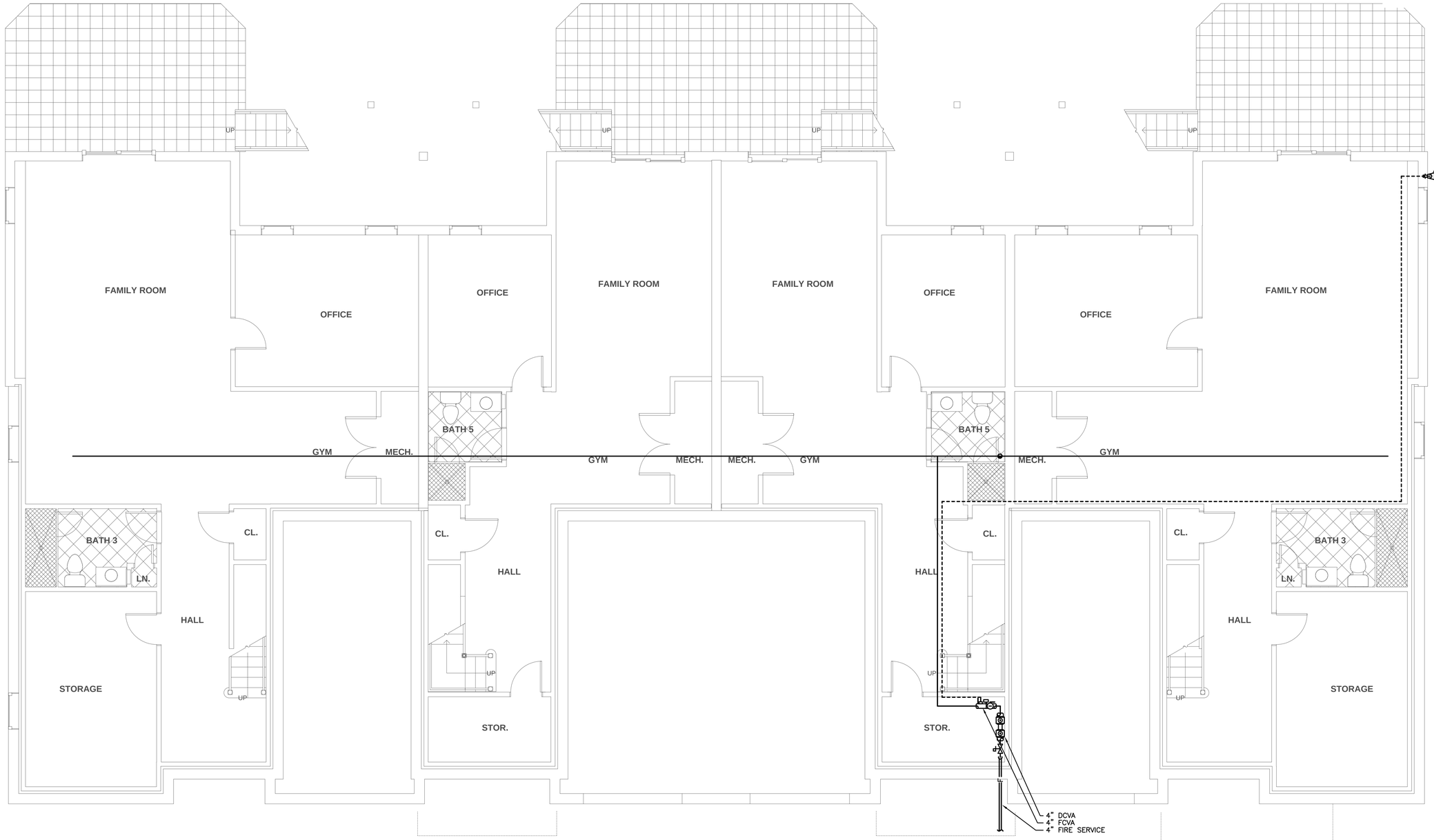

NOTES:

1. THIS FLOOR SHALL BE FULLY SPRINKLERED BASED ON NFPA 13–2013 CRITERIA
2. SPRINKLER CONTRACTOR IS TO DEVELOP COMPLETE SPRINKLER LAYOUT PER NFPA 13–2013
3. SPRINKLERS THROUGHOUT SHALL BE RESIDENTIAL TYPE.
4. PROVIDE COMPLETE SPRINKLER PROTECTION WITHIN COMBUSTIBLE CONCEALED SPACES ABOVE ALL CEILINGS THROUGHOUT USING SPRINKLERS LISTED FOR COMBUSTIBLE, CONCEALED SPACES W/ DRAFT CURTAINS EVERY 1000 SQ. FT. BY GC. SPRINKLER SPACING SHALL NOT EXCEED 12' X 12'.
5. PROVIDE COMPLETE SPRINKLER PROTECTION WITHIN COMBUSTIBLE CONCEALED SPACES BEHIND WALLS MORE THAN 6" WIDE. PROVIDE COMPLETE SPRINKLER PROTECTION WITHIN ALL VERTICAL PIPE CHASES CONTAINING PLASTIC PIPING OR SOURCE OF IGNITION REGARDLESS OF SIZE.
6. DRY SPRINKLER BARRELS SHALL EXTEND A MINIMUM OF 6" INTO CONDITIONED SPACE.

WB&A
Wozny/Barbar & Associates, Inc.
CONSULTING ENGINEERS
1076 Washington Street
Hanover, MA 02339
Tel: (781) 826-4144
Fax: (781) 924-5792
www.wbaengrs.com
161 Exchange Street
3rd Floor
Pawtucket, RI 02860

Date issued:

07.15.19

WINSLOW ARCHITECTS INC
89 MASSACHUSETTS AVE.
ARLINGTON, MA 02474
P: 781 648.6600
F: 781 648.6601
www.winslowarchitects.com

Owner/Developer:

MEDFIELD GREEN LLC.

Project:

MEDFIELD GREEN

Drawing:

FIRE PROTECITON BUILDING H BASEMENT PLAN

Revisions:

No.	Description	Date

Stamp:

ANY REPRODUCTION, POSSESSION OR USE OF THIS DRAWING WITHOUT THE WRITTEN PERMISSION OF WINSLOW ARCHITECTS INC. IS PROHIBITED. VIOLATORS WILL BE PROSECUTED TO THE FULL EXTENT OF THE LAW.
© 2019 WINSLOW ARCHITECTS, INC.

Project number:

16-515

Sheet:

F-H-100

7/17/2019 10:38 AM